Huiheng Pharma Machinery

FDA standard filling equipment

Mainstream supplier of global filling equipment



TECHNOLOGY LEADER INDUSTRY MODEL

PERISE IN PHARMACEUTICAL INDUSTRY

Huiheng Pharma Machinery

上海晖恒制药机械有限公司

SHANGHAI HUIHENG PHARMACEUTICAL MACHINERY CO., LTD.

Sales HQ:

Add: Rm 808, No. 6088, Humin Road, Xinzhuang Town, Minhang District, Shanghai, China P.C.: 201100

Tel: +86-13166139318 Email: kevinpharmachinery@gmail.com

Web: www.huihengmachinery.com www.machine-pharma.com

Factory

Add : 1 F, Building 28, No. 6055 Jinhai Road, Fengxian District, Shanghai P.C.: 201400

HUIHENG mainly provides the following equipments for domestic and foreign pharmaceutical enterprises:



About us

Shanghai Huiheng Pharmaceutical Machinery Co., Ltd. is a national high-tech enterprise specialized in R&D, manufacturing, sale and after-sale service of pharmaceutical machinery. Headquartered in Shanghai, HUIHENG is shouldering the mission of serving the pharmaceutical industry with advanced technology, and always follows the latest requirements from cGMP, FDA, PICs and other authorities.

HUIHENG mainly engaged in R&D, production, sales and service of aseptic injection filling production line, liquid vials, lyophilized vials, powder vials, small volume ampoules, oral liquid linkage line, PFS (pre-fill system), BFS (Blow- Fill -Sealing), PP bottle IV solution production line, large volume parenteral production line and Non-PVC film soft bag infusion production line etc. The company can provide professional and personalized filling system overall solution for pharmaceutical enterprises with our advanced R&D and design capability.

HUIHENG would adhere to the principle of “Innovation for Life”and apply its innovation expertise and scientific management concept to serve clients all over the world. Under the leadership of a united, enterprising and efficient management team, HUIHENG is making steady progress in a brilliant direction. The company is advancing itself to a higher goal in terms of capital operation, product structure adjustment, new product R&D, quality assurance and service network, so that each of our customers can use our products with confidence and pride.





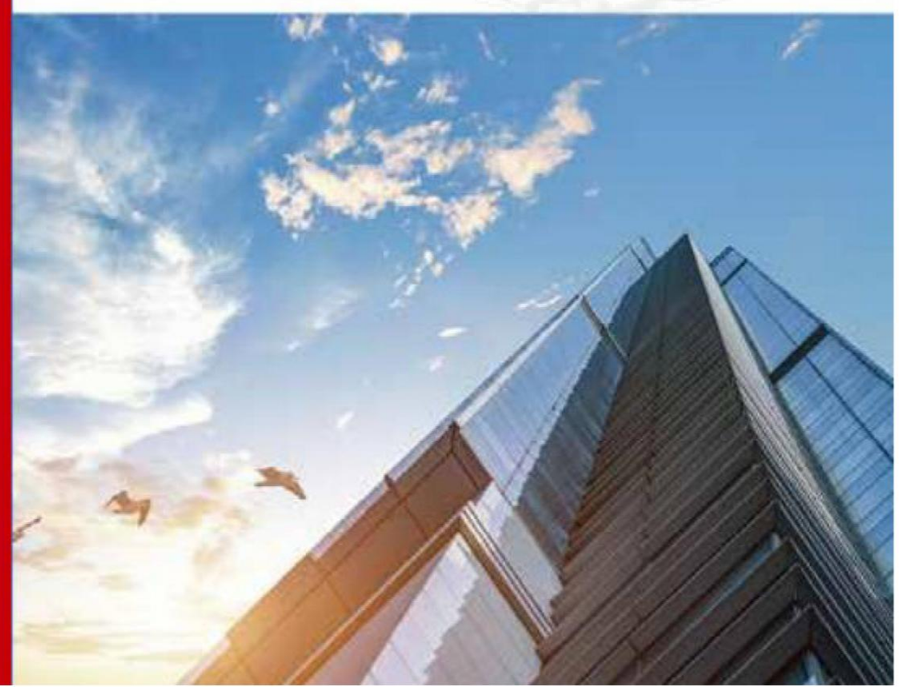

Table of Contents

01/04 **ABOUT US**

05/08 **Aseptic Blow-Fill-Seal Machine (BFS)**

09/10 **Freeze Dryer System Production Line**

11/12 **SHH-GXL Series Vial Injection Washing Drying Filling Stoppering Capping Production Line**

13/14 **SHH series of Ampoule Washing Sterilization Filling Sealing Production line**

15/16 **SHH-GF Series Vial Powder Washing Drying Filling Stoppering Capping Production Line**

17/22 **SHH-Combo Series Ampoule and Vial Injection Washing Drying Filling Closing Production Line**

23/24 **SHH-QCL Series Vial & Ampoule Vertical Ultrasonic Washing machine**

25/26 **SHH-ASMR Series Tunnel Type Hot Air Circulating Drying Oven**

27/28 **SHH-GZL Series Vial Liquid Filling Stoppering Machine**

29/30 **SHH-GZF Series Vial Powder Filling Stoppering Machine**

31/32 **SHH-ZG Series Automatic Screw Type Capping Machine**

33/34 **SHH-AFS Series Glass Ampule Filling Sealing Machine**

35/36 **SHH Series Non-PVC Soft Bag IV Infusion Production Line**

37/38 **Aseptic PP Bottle Moulding Washing Filling Stoppering Capping Production Line**

39/40 **Automatic Suppository Production Line**

41/42 **SHH-SY Series Automatic Syringe Filling Stoppering Production Line**

43/44 **SHH-CX Model Large Volume Liquid Filling Production Line**

45/46 **SHH-EDF Series Automatic High Speed Eye Drops Filling Capping Machine**

Aseptic Blow-Fill-Seal Machine (BFS)



Main application

Bottle Blowing-Filling-Sealing Machine (BFS) is a aseptic packaging technology. The system can ensure the process such as pharmaceutical grade PP/PE particles extrusion into container, automatic filling and sealing under aseptic condition. It can effectively reduce the pollution of human operation, environmental, material and so on. It meets the requirements of aseptic production process which widely apply to various areas of plastic bottle sterile liquid preparation.

Product mould



Small Volume Product Mould

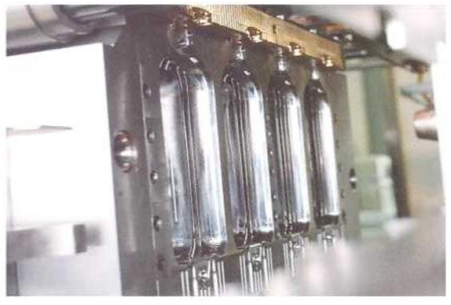

LVP Mould

Process flow



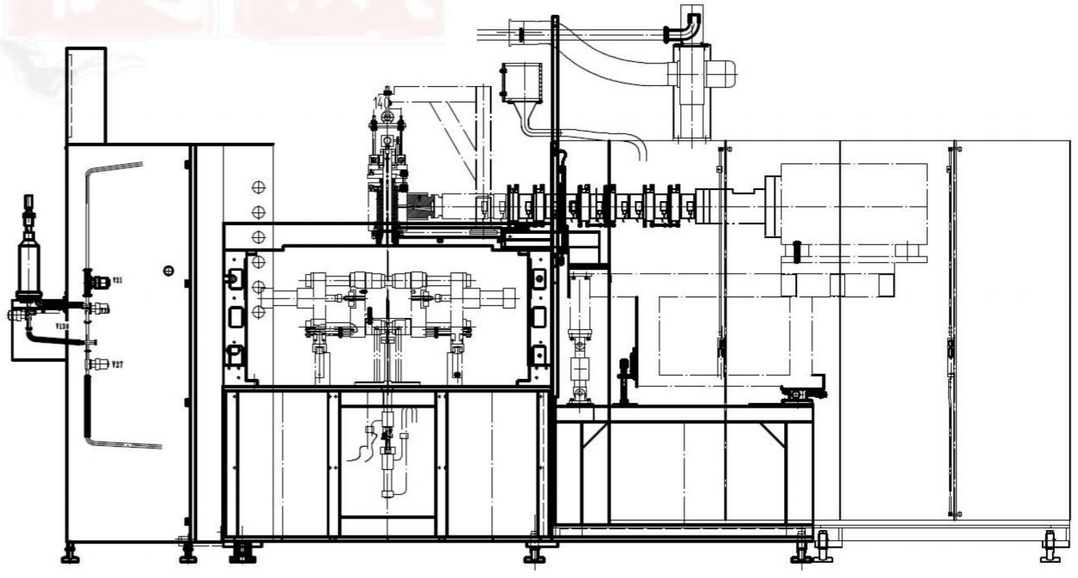

Layout of BFS Machine

Aseptic Bottle Blow-Fill-Seal Machine (BFS)

Classfication of containers

Small volume product





Mainly for the production of small volume injection, eye drops, oral liquid, ear drops, and other products.The filling range is 0.1ml-20ml, output depends on the filling quantity and mould cavity number.

Large volume product





Mainly for the production of intravenous injection, cleaning fluid, eye-washing drops, lens care solution, etc.The filling range is 50ml-1 L, output depends on the filling quantity and mould cavity number.

Cutting station



Type Selection

BFS machine type selection reference table			
Type	**Cavity Number**	**Capacity (Bottle per Hour)**	**Specification**
BFS30	30	9000	0.2-5ml
BFS20	20	6000	5-20ml
BFS10	10	3000	10-30ml
BFS8	8	1600	50-500ml
BFS6	6	1200	50-1000ml
BFSD30	Double30	18000	0.2-5ml
BFSD20	Double 20	12000	5-20ml
BFSD10	Double 10	6000	10-30ml
BFSD8	Double 8	3200	50-500ml
BFSD6	Double6	2400	50-1000ml





Full Automatic Freeze Drying System Production Line

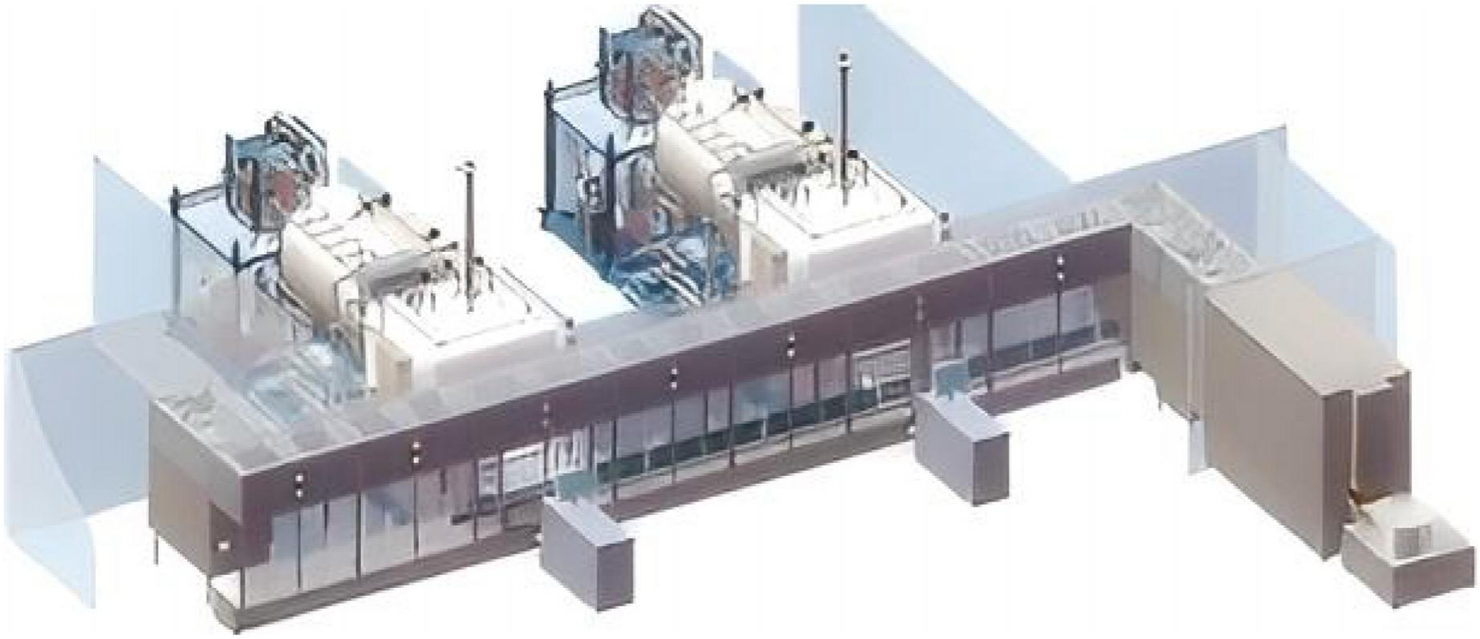

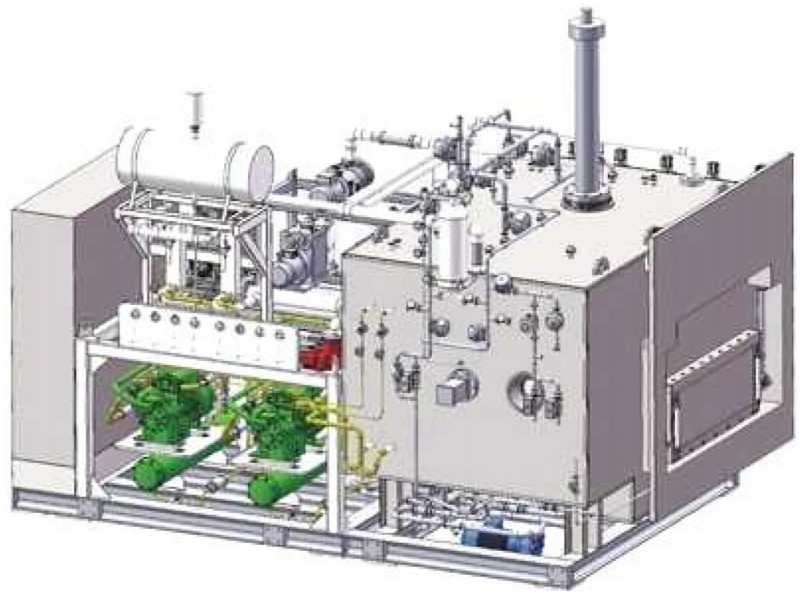

Best freeze-drying technology

We have prepared for your choice depending on our experience in pharmaceutical manufacturing and service. We will provide customized products with more flexible and better services for you.

Lyophilizer furtures

- The products fully reflect the stability and reliability of HUIHENG lyophilizer in LYO-Max series. SIP and CIP are optional.
- Organic solvents, high-risk formulation and ATEX are optional.
- The optimized industrial design is easy to clean without dead angles.
- Independent, professional and reliable software development; HMI interface is friendly and practicable.

Main Technical Parameters

Product Model		LF experimental type	LYO-Max productive-oriented										
Shelves loading usable area (m^2)		0.5	1	2	5	7.5	10	15	20	25	30	35	40
Water catch capacity (kg)		10	20	40	100	150	200	300	400	500	600	750	800
16 mm vial		1900	4600	10550	20880	32500	41750	61900	85100	100550	125700	150800	174000
22 mm vial		1000	2450	6150	11050	17200	22100	32700	45000	53200	66500	79800	92100
Bulk solution quantity (L)		10	20	40	100	150	200	300	400	500	590	590	800
Shelves size	Width (mm)	300	450	600	900	900	900	1200	1200	1200	1500	1500	1500
	Length (mm)	450	600	900	900	1200	1200	1200	1500	1500	1500	1800	1800
Shelves quantity		4+1	4+1	5+1	6+1	7+1	9+1	10+1	11+1	13+1	13+1	13+1	15+1
Spacing (mm)		80	100-120 (depends on customers requirements)										
Temperature range of shelves (°C)		-55, +70	-55, +70										
Temperature of cold trap (°C)		《•70	G70										
Ultimate vacuum (Pa)		1	1										
Installed power (kW)		8	10	16	33	45	55	70	105	120	144	163	180
Cooling water quantity (m^3/h)		3	5	7	11	16	18	25	37	37	42	50	50
Compressed air (MPa)		0.1 (0.5-0.7)	0.1 (0.5-0.7)										
length (mm)		1000	2650	3700	4800	5000	5800	6200	9100	9100	8900	9200	9200
Width (mm)		850	1600	1800	2380	1600	5730	5730	4715	4715	5730	5730	5730
height (mm)		2200	2500	3000	3400	3160	5000	5150	5465	5730	6250	6250	6250
Equipment weight (kg)		440	1500	2200	7000	9000	12000	17000	23800	28000	31000	34000	36000
Pure steam consumption (kg/h)		—	60	100	130	150	200	230	280	320	380	380	450
Pure water/WFI quantity (l/min)		—	60	90	120	150	160	200	230	260	280	280	300

SHH-GXL Series Vial Injection Washing Drying Filling Stoppering Capping Production Line





Description

The SHH-GLX model vial injection washing- drying-filling-stoppering-capping production line is composed of the SHH-QCL series vertical ultrasonic washing machine, SHH-ASMR series depyrogenation tunnel, SHH-KGF series vial injection filling and stoppering machine, and SHH-KGL series capping machine whilst the individual machine can also be used independently. Suitable for production of vial injection of 2-30ml, it can complete morethan 20 work procedures such as ultrasonic bathing,three-time WFI and recycled water washing, three-time compressed air flushing, exterior wall water washing and compressed air flushing, preheating, drying, sterilizing, depyrogenation, cooling, pre-fill gas purging, filling, post-fill gas purging, stoppering and capping.

Main Technical Parameters

Product Model	QCL60+ASMR 620/35+KGF4	QCL60+ASMR 620/43+KGF6	QCL60+ASMR 620/43+KGF8	QCL80+ASMR 620/48+KGF10	QCL120+ASMR 800/55+KGF12	QCL120+ASMR 1250/60+KGF20	QCL80*2+ASMR 1250/60+KGF12*2
Applicable Specifications(ml) (GB standard vial)	2-25						
Number of Filling Heads	4	6	8	10	12	20	24
Production Capacity(pcs/min)	120(2ml)	180(2ml)	200(2ml)	300(2ml)	400(2ml)	500(2ml)	650(2ml)
Qualified Rate of Bottle Washing(%)	≥99						
Breakage Rate of Washing(%)	≤0.1						
Sterilization Temperature(℃)	300-350						
Exhaust Air(m^2/h)	3,000		4,100		7,500	8,000-10,000	
Filling Accuracy(%)	≤±2.5 (Mechanical control of filling pump) ≤±0.5-1.0 (Servo contro of filling pump)						
Qualifed Rate of Stoppering(%)	≥99						
Cleanliness of Laminar Air (Class)	100						
Speed of Vacuum Pumping (m^3/h)	10	30	50	60	60	100	120
Capacitance(kw)	66.6	75.6		106.6		212.6	232.6
Power Supply	380V, 50HZ						
Total Weight(kg)	6,300	6,300	7,900		9,400	10,900	14,600
Dimension (LxWxH)(mm)	8,550x2,540x2,330		9,620x2,540x2,330		10,280x3,230x2,360	12,738x2,600x2,620	11,790x5,700x2,620

SHH-AFS series of Ampoule Washing Sterilization Filling Sealing Production line





Description

The SHH-AFS model ampoule washing-drying-filling-sealing production line is composed of the SHH-QCL series vertical ultrasonic washing machine, SHH-ASMR series depyrogenation tunnel and SHH-AGF series vertical filling-sealing machine, whilst the three machines can also be used independently. Suitable for production of ampoules of 1-20ml, it can complete more than 20 work procedures such as ultrasonic bathing, three-time WFI and recycled water washing, three-time compressed air flushing, exterior wall water washing and compressed air flushing, preheating, drying, sterilizing, depyrogenation, cooling, pre-fill gas purging, filling, post-fill gas purging, heating and sealing. This production line is a new-type processing line which is researched and developed by Huiheng through its own patented technologies based on its deep understanding of the regulatory requirements and customer needs.

Characterstics

- Vertical ultrasonic washing machine using ultrasonic rough washing, circulating water, WFI and clean compressed air spray and clean the container alternately. Cleaning clarity and visible material detection effect is ideal; it is the most popular cleaning machine in the world today.
- The sterilization tunnel adopts the principle of hot air laminar flow and high temperature sterilization process to preheat, dry, sterilize, remove heat and sterilization process. It is the most popular drying and sterilizing machine in the world.
- Filling and sealing machine adopts step-by-step bottle conveying, positioning filling, wire drawing and sealing. The sealing rate is high. It is the most popular filling and sealing machine in the world.
- The interlocking production line adopts PLC control and touch screen operation, which can be used for linkage control or stand-alone operation. The control runs stably and with high automation.

Main Technical Parameters

Product Model	QCL100+ASMR620 +AGF8/1-20	QCL100+ASMR620 +AGF10/1-20	QCL120+ASMR620 +AGF12/1-10	QCL120+ASMR620 +AGFD12/1-20	QCL160+ASMR620 +AGF16/1-3	QCL160+ASMR620 +AGFD16/1-5
Applicable Specifications(ml) (GB Standard Ampoule)	1-20	1-20	1-10	1-20	1-3	1-5
Capacity(pcs/h)	1-2ml: 22,000	1-2ml: 24,000	1-2ml: 28,000-30,000	12,000-30,000	36,000-42,000	30,000-42,000
	5ml: 16,000	5ml: 18000				
	10ml: 11,000	10ml: 15,000	5-10ml: 18,000-20,000			
	20ml: 6,000	20ml: 8,000				
Clarity (%)	>99					
Qualified Rate(%)	≥99					
Filling Accuracy(%)	≤±2.5					
Fresh Water Cosumption (cbm/h) and Pressure (mpa)	Consumption: 0.4-1.0 Pressure: 0.2					
Purified Compressed Air Consumption (cbm/h) and Pressure (mpa)	Consumption: 30-75 Pressure: 0.15					
Sterilizing Temperature(°C)	300-350					
Exhaust Volume(m^3/h)	4,100					
Gas Fuel Consumption (cbm/h) and Pressure (mpa)	Consumption: 1.5-2.5 Pressure: 0.2-0.3					
Oxygen Consumption(cbm/h) and Pressure(mpa)	Consumption: 1.2-1.5 Pressure: 0.2-0.3					
Dimension(LxWxH)(mm)	9,940x2,003x2,445	10,000x2,260x2,455				10,600x2,260x2,455
Weight(kg)	7,500					
Power capacity(kw)	380v 50hz,71					

SHH-GF Series Vial Powder Washing Drying Filling Stoppering Capping Production Line





Overview

The SHH-GF model vial powder washing drying filling capping labeling production line is composed of the SHH-QCL series vertical ultrasonic bottle washer, the SHH-ASMR series tunnel-type hot air circulating sterilization drying oven, the SHH-GF series filling and stoppering machine, and the SHH-ZG series capping machine.

The appearance of this integrated production line is simple and beautiful, occupying minimal space and being easy to clean. It is suitable for the production of small-volume penicillin bottle injection filling and stoppering, ranging from 2-30ml. It can complete over twenty process steps such as water rinsing, ultrasonic cleaning, flushing, air flushing, drying and sterilization, cooling, (pre-flushing with nitrogen), filling, (post-flushing with nitrogen), cap sorting, cap pressing, cap sorting, and capping in the pharmaceutical production of penicillin bottles.

The design concept of the integrated line is advanced, the structure is reasonable, and the performance is stable, providing equipment and technical support for the aseptic production of pharmaceutical products in pharmaceutical plants, in compliance with the relevant requirements of the current national Good Manufacturing Practice (GMP) for pharmaceutical production quality management.







Process Flow

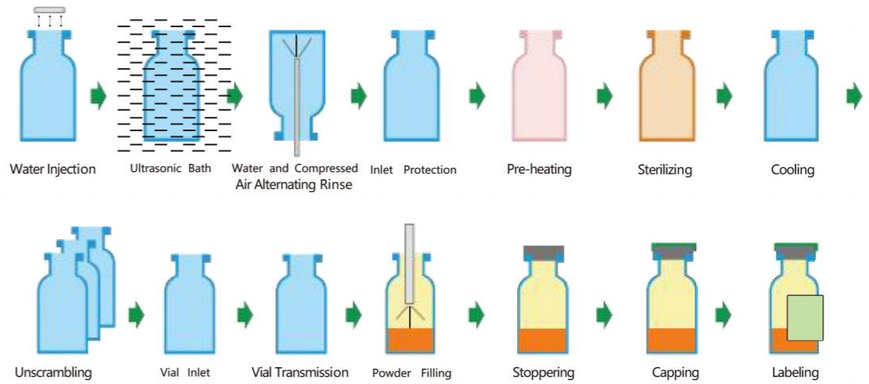

Main Technical Parameters

Applicable Specifications (ml)	2-30 (GB standard vial)	
Capacity (pcs/min)	250 (two-head filling)	400 (four-head filling)
Qualified Rate of Washing (%)	≥99.0	
Breakage Rate of Washing (%)	≤0.1	
Sterilizing Temperature (C°)	300-350	
Filling Accuracy (%)	≤±3.0	
Qualified Rate of Stoppering (%)	≥99	
Cleanliness of Air Laminar Flow (Class)	100	
Speed of Vacuum Pumping	25m³/H 100cbm/H	50m³/H 100cbm/H
Power (kw)	96	135.5
Power Supply	380v 50Hz	
Total Weight (kg)	8200	
Dimension (mm)	2,000x1,750x2,370	

SHH-Combo Series Ampoule and Vial Injection Washing Drying Filling Closing Production Line



Overview

The SHH-Combo Series ampoule and vial injection combo washing- drying-filling-closing production line is composed of the SHH-QCL series vertical ultrasonic washing machine, SHH-ASMR series tunnel type depyrogenation, SHH-AGF series ampoule and vial filling machine, and SHH-GL series capping machine whilst the four machines can also be used independently. Suitable for production of ampoule injection of 1-20ml and vial injection of 2-30ml, it can complete more than 20 work procedures suchas ultrasonic bathing, three-time WFI and recycled water washing, three-time compressed air flushing, exterior wall water washing and compressed air flushing, preheating, drying, sterilizing, depyrogenation, cooling, pre-fill, gas purging, filling, post-fill gas purging, sealing, stoppering and capping.

Launched successfully after our years of R&D efforts, this combo filling production lineis of high capacity and complied with cGMP requirement. It is featured by fast production, high qualification rate and convenient maintenance and operation, and low running costs.

This compact combo filling line adopts the PLC control to achieve full automation.

Performance Features

- The washing machine adopts mechanical arms to clamp the containers, suitable for ampoules of 1-20ml and vials of 2-30ml;
- The water-gas spray nozzles adopt the reciprocating tracking insertion mode for container washing, featured by excellent washing effect and energy saving. It is also provided with a device that prevents the nozzle holder from shaking to enhance the accuracy of the spray nozzle's insertion into the container and reduce the occurrence of nozzle breakage;
- The water and gas pipes are totally separable from the spray nozzles, so that cross contamination is avoided and cGMP requirements are met;
- The spray nozzle guide mouth of the container washing machine adopts imported ceramic bushing without wear;
- Container out-feed is realized by the integral imported synchronous belt that is connected to the container pushing block to convey ampoules, a structure that ensures stable and reliable operation;
- The depyrogenation tunnel adopts the hot air circulation heating method with even temperature and energy saving;
- The depyrogenation tunnel is provided with the function of protecting against sudden power-off to ensure safe running;
- The depyrogenation tunnel can be equipped with the water cooling device that does not consume air volume in the room, whilst reducing the risk of unbalanced differential pressure in the room and achieving good cooling effect;
- The depyrogenation tunnel can be equipped with the differential pressure automatic balancing and regulating system to reduce the problems of deviation at the high temperature section caused by unbalanced differential pressure in the room and tunnel, temperature rise in the filling room and washing-drying room;
- The depyrogenation tunnel is provided with PAO inspection ports (including inspection ports for air pressure air speed and dust particles);
- The cooling section in the tunnel is provided with the sterilization function (specially chosen by FDA).

Performance Features

- The depyrogenation tunnel mesh belt can be equipped with the ultrasonic and CIP cleaning systems;
- The depyrogenation tunnel chamber can be subject to all-round, multi-angle high pressure water washing;
- The filling and closing machine can be used for ampoule filling, vial filling and full-stoppering, and vial filling and half-stoppering;
- The filling and closing machine is provided with sufficient gas purging work stations to ensure one-off purging and the completion of the procedures of pre and post fill nitrogen purging and full/half stoppering;
- The filling and closing machine is provided with the functions of no bottle no filling and no bottle no stoppering;
- The filling machine can be equipped with the servo filling system;

According to customers' requirements, the production line can also be equipped with the following options:

- Control system of such brands as Siemens, Schneider, Mitsubishi, Allen Bradley, Delta and etc.;
- Online monitoring system for water pressure, air pressure, water temperature, ultrasonic strength, dust particles and air speed, alarm, recording and printing systems;
- ORABS, CRABS, aseptic isolator system.







Filling Nozzles

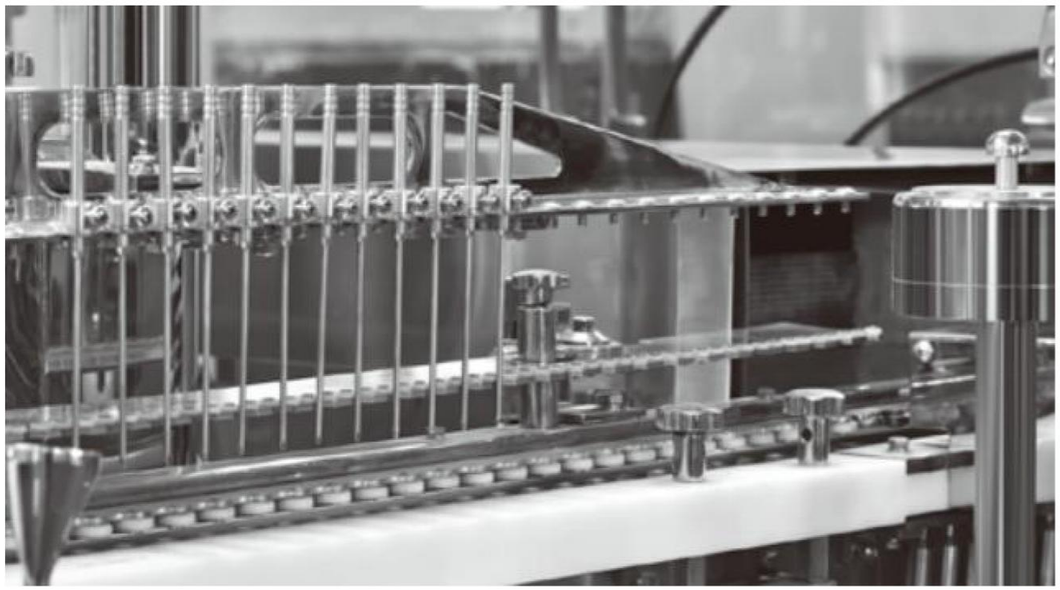

Installation Layout

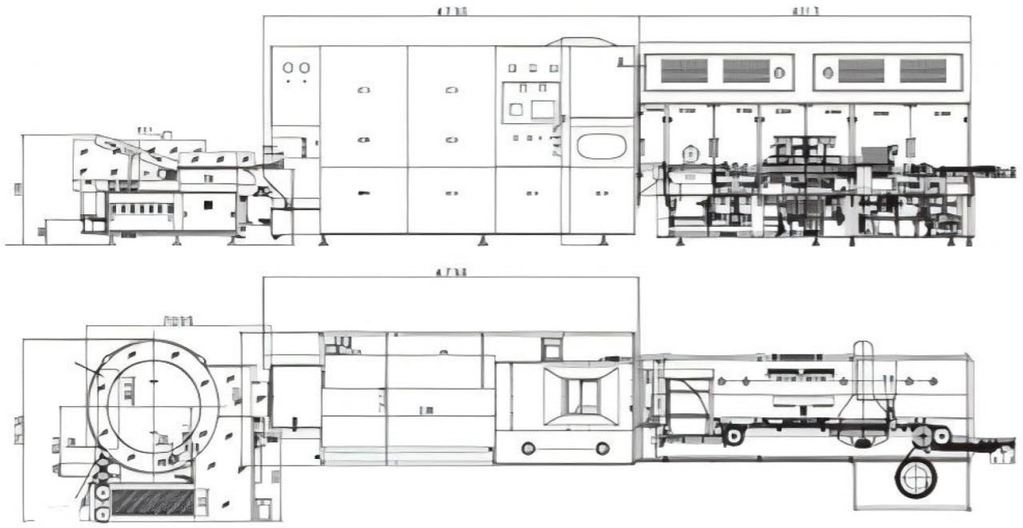

Process Flow

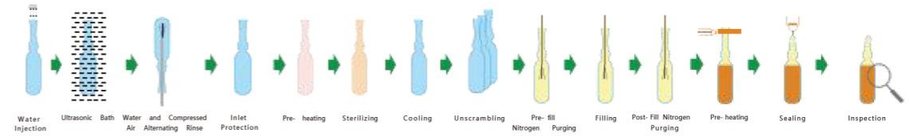



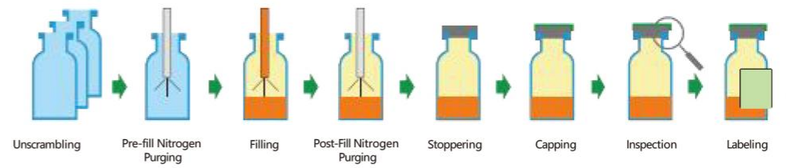

Main Technical Parameters

Product Model	QCL80+ASMR620/48+KAGF8		QCL120+ASMR620/48+KAGF10	
Applicable Specifications (ml)	Vial: 2-30	Ampoule: 1-20	Vial: 2-10	Ampoule: 1-20
Capacity (pcs/h)	6,000-18,000	6,000-23 ,000	8,000-20,000	8,000-28 ,000
Clarity (%)	>99			
Qualified Rate of Stoppering (%)	>99			
Filling Accuracy (%)	≤±2.5			
Fresh Water Consumption (m^3/h) and Pressure (mpa)	Consumption: 0.4-1.0 Pressure: 0.2-0.3			
Purified Compressed Air Cosumption (m^3/h) and Pressure (mpa)	Consumption: 30-75 Pressure: 0.2-0.3			
Sterilizing Temperature (°C)	30-35			
Exhaust Volume (m^3/h)	500	900	500	900
Cleanliness of Laminar Air (Class)	100			
Gas Fuel Consumption (m^3/h) and Pressure(mpa)	/	Consumption: 1.5-2.5 Pressure: 0.2-0.3	/	Consumption: 1.5-2.5 Pressure: 0.2-0.3
Oxygen Consumption (m^3/h) and Pressure (mpa)	/	Consumption: 1.2-1.5 Pressure: 0.2-0.3	/	Consumption: 1.2-1.5 Pressure: 0.2-0.3
Speed of Vacuum Pumping	20	/	20	/
Dimension (L x W x H)(mm)	100			
Weight (kg)	7,500			
Power Capacity (kw)	380V 50HZ			

SHH-QCL Series Vial & Ampoule Vertical Ultrasonic Washing machine



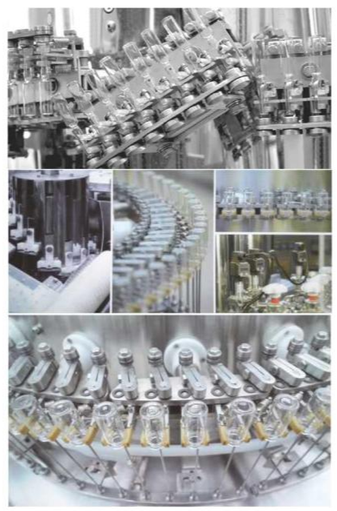

Description

This machine is mainly used for washing of vials in pharmaceutical factories, it also can be used for washing glass containers such as ampoules and oral liquid bottles.

SHQCL series vertical ultrasonic washing machine is my company after years of efforts, digesting and absorbing foreign technology, combined with China's national conditions and the successful development of new products. Advanced technology, the features of simple structure, smooth operation, reliable, low noise, easy to operate, easy to clean. Suitable for pharmaceutical vials or molded bottle washing, antibiotics can also be used for injection ampoule bottle or oral liquid bottle cleaning.

According to the needs of customers, but also available for selection:

- Pieces of Siemens, schneider, mitsubishi, Taiwan brands such as control system;
- Pieces of water, gas pressure, water temperature and the intensity of ultrasonic, dust particles, wind speed on-line detection, alarm, record and print system.

Characteristic:

- This machine is of vertical drum structure, using the manipulator flip and nozzle for reciprocating tracking way. Use of ultrasonic cleaning and water alternating injection flush, can automatically into the bottle, ultrasonic cleaning, washing, the whole process of washing, the bottles, whole process simulation of the gear meshing theory. The machine broken bottles rate low, wide generality, smooth operation, because the water pipe, no cross contamination, completely accord with the requirement of GMP.
- Pieces into the bottle with two sections of mesh belt structure, ensure the enough thrust in water, the screw is not short of bottle.
- Pieces in the screw into the bottle is equipped with buffer device, ensure that bottle no broken bottles and the wear and tear of the screw, the screw using non-toxic pollution-free polyformaldehyde material, stainless steel shaft to strengthen the center axis, make sure that the screw is not out of shape.
- The needle against the shaking device, enhance the accuracy of injection needle into the bottle, reduce the fault phenomenon.
- Pieces out of rod manipulator and the market has the spill prevention mechanism, ensure lubricating oil polluting the water tank.

Main Technical Parameters

Model	Applied (ml)	Capacity (bottle/min)	The qualification rate (%)	Breakage rate (%)	Water consumption	Gas consumption	Dimension (L × W × H)(mm)	Weight (kg)	Power supply	Power (kw)
SHH-QCL60	1-20 (ampoule) 2-25(vial)	100-250	> 99	< 0.3	0.4-0.6m3/h 0.2-0.3mpa	40-50m3/h 0.25-0.35mpa	2099 × 2003 × 1169	2000	380V/50Hz	17.6
SHH-QCL80	1-20 (ampoule) 2-25(vial)	150-350	> 99	< 0.3	0.6-0.8m3/h 0.2-0.3mpa	50-60m3/h 0.25-0.35mpa	2260 × 2260 × 1327	2400	380V/50Hz	17.6
SHH-QCL100	1-20 (ampoule) 2-25(vial)	200-450	> 99	< 0.3	0.8-0.9m3/h 0.2-0.3mpa	55-65m3/h 0.25-0.35mpa	2099 × 2003 × 1169	2000	380V/50Hz	17.6
SHH-QCL120	1-20 (ampoule/vial)	250-550	> 99	< 0.3	0.9-1m3/h 0.2-0.3mpa	65-75m3/h 0.25-0.35mpa	2260 × 2260 × 1327	2400	380V/50Hz	17.6
SHH-QCL160	2-25 (vial/ampoule)	300-600	> 99	< 0.3	0.9-1m3/h 0.2-0.3mpa	65-75m3/h 0.25-0.35mpa	2475 × 2350 × 1350	2500	380V/50Hz	17.6

SHH-ASMR Series Tunnel Type Hot Air Circulating Drying Oven



Purpose and description:

This machine is integral tunnel structure, divided into preheating zone, high temperature sterilizing zone, cooling zone, adopts hot air laminar flow sterilizing principle to short-term high temperature sterilization containers. Suitable for ampoule bottle drying sterilization, antibiotics, oral liquid, can also be used for other medicinal glass bottle drying sterilization. The machine adopts advanced PLC man-machine interface control system, through the man-machine interface control, in addition to monitoring the machine working condition, ensure the production process requirements. Also with cleaning equipment working conditions, filling and sealing equipment for spreading and show the cause of the problem, location, and simple method, etc. And it can automatically record and temperature characteristic curve.

Characteristic

- Mixer has the electricity heat period of spontaneous combustion device, no fire hazards
- Heating mixer, such as running process parameters set beforehand
- Parameter status display, automatic printed out
- Cycle can be adjusted by the blast, the evenness of temperature in the oven
- In pieces with temperature measuring points and box in the mouth
- Mixer equipped with hepa filter DOP test
- Mixer machine are designed to meet GMP standard

According to the needs of customers, but also available for selection:

- In pieces such as Siemens, schneider, mitsubishi, Taiwan brand monitoring system;
- Pieces of dust particle on-line detection and alarm, record and print system.

Main Technical Parameters

Model	ASMR620-35 (38) (Air-Cooled)	ASMR620-43 (Air-Cooled)	ASMR620-48 (Air-Cooled)	ASMR800-55 (Air-Cooled)	ASMR1250-6000 (Air-Cooled)	ASMR620-43 (Water-Cooled)	ASMR620-48 (Water-Cooled)	ASMR800-55 (Water-Cooled)
Applied bottle (ml)	1-20ml(ampoule); 2-25ml(vial)							
Effective width of the conveyor belt(mm)	620	620	620	800	1250	620	620	800
The highest temperature sterilization (℃)	350							
Outlet bottle temperature(℃)	< 40							
Water and temperature	/	/	/	/	/	Water temperature entering the condenser: 8℃ - Cooling water Cooling water consumption: 3 tons per hour		
Exhaust air rate (m3)	3000-4100	3500-4100	3500-4100	6600-8200	8500-9500	300	300	300
Cooling period of sterilization	N	N	N	N	N	N	Y	Y
Power	27.7kw (21.6kw)	51kw (43kw)	71kw (60kw)	78kw (60kw)	196kw (172kw)	51kw (43kw)	104kw (60kw; 32.4kw)	152kw (78kw, 46.8kw)
Cleanliness	Achieve international level 3 (equivalent to the 100th level of the American industrial standard)							
Overall dimensions (according to customer request production changes)(L × W × H)(mm)	3550×1760×2343	4388×1465×2445	4738×1614×2445	5480×1950×2210	6200×2936×2670	4385×2050×2385	4887×1831×2343	6000×1870×2370
Weight(kg)	2300	3000	3500	4000	6000	3500	4000	4500

SHH-GZL Series Vial Liquid Filling Stoppering Machine



Description

The machine is a continuous linear multi-fimction filling device for handling of the aseptic injectables liquid under cleaning environment with a "V shape conveyor vial transferring from the infeeding to the outfeeding. This conveyor belt with no sizepart change for handling of vial sizes from 1ml to 100ml.

Characteristic

This machine adopts single row synchronous belt for conveying, and servo motor control for following movement: filling needle up and down & fro and back, integral type sucker plugging and outfeed. It can automatically finish procedures of vial orienting, conveying, (pre-nitrogen), filling, (post-nitrogen), stopper orientation, plugging etc. For the plugging, it can do full plugging and half plugging.

Based on all kinds of advanced technology in company, together with the filling principle, we designed and developed this kind of high speed sterile filling machine with all servo system. There are options for GRABS, IPC weighing system, CIP&SIP for filling system. The high configuration of ttiis method can fully meet EU cGMP and FDA standard.







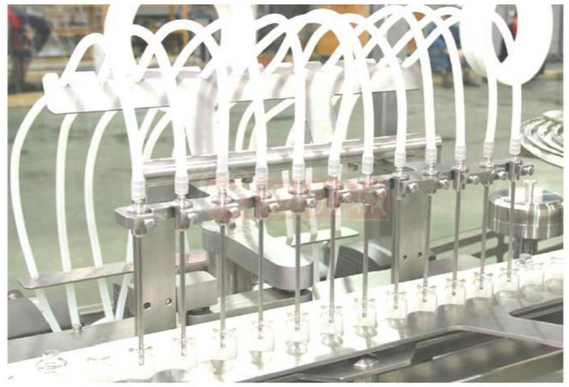



Main Technical Parameters

Model	Suitable sizes	Capacity	Filling heads	Plugging heads	Power	Net weight	Overall dimension
SHH-GZ12	2-30ml(vial)	6000-24000 BPH	12	24	17 kw	2000kg	4670X2150X1850mm
SHH-GZ12/10	2-30ml(vial)	6000-20000 BPH	10		16 kw		
SHH-GZ12/8	2-30ml(vial)	6000-16000 BPH	8		15 kw		
SHH-GZ12/6	2-100ml(vial)	3000-12000 BPH	6	12/24	14 kw		
SHH-GZ6	2-30ml(vial）	3000-12000 BPH	6		14 kw	1500kg	3950X1950X1850mm
SHH-GZ6/4		3000-7200BPH	4		13 kw		
SHH-GZ6/2	2-100ml(vial)	1000-3600BPH	2		12 kw		

SHH-GZF Series Vial Powder Filling Stoppering Machine













Description

SHH-GZF series high speed screw type powder filling machine is our company newly developed product. Suitable for 18 ~ 32 mm diameter, height of 40 ~ 73 mm controls or molded vial bottles crystalline powder, powder spraying, producing quantitative packaging. Sterile powder drug quantitative packing can be in the sterilization of dry inside the bottle of antibiotics, and cover tightly stopper to seal it. This equipment is the pharmaceutical factory one of the main equipment of producing asepsis powder booster injection preparation.

Characteristic

- In pieces the packer for intermittent screw powder aseptic packaging equipment, the whole machine adopts full servo motor drive, PLC programmable control, touch screen
- Mixer adopts a continuous movement of the fan will dial in and out of the bottle and repackaging intermittent movement link up, high speed, stable operation;
- In pieces to a repackaging sterile powder directly to vial bottles, no secondary pollution;
- Equipped with a variety of photoelectric sensor protection device, with no downtime, no downtime, no bottle check, automatic sampling, etc；
- Pieces can be equipped with online fill nitrogen filling, online simulation device;
- Mixer adopts RABS protection, protective WeiDang open downtime, microbial, dust particles, wind speed can be equipped with online monitoring device. Rubber plug, the sterile docking transfer API.

Main Technical Parameters

Model	SHH-GZF300
Production capacity (bottle/min)	300
Filling range (g)	0.1-4, 5-10, 10-20, 20-50, 50-100
Applicable specifications (ml)	Crystalline powder, spray-dried powder, freeze-dried powder
Accuracy	The volume difference is 2% lower than the pharmacopoeia standard
Hang cover rate(%)	＞99.0
Power	380V 50Hz, 3.5KW
Total power(kw)	3.5
Overall Dimensions(L × W × H)(mm)	2200 × 2400 × 2350
Total weight(kg)	1500

SHH-ZG Series Automatic Screw Type Capping Machine





Machine Description：

Vial infeeding, cap loading, and vial outfeeding automatically completed and the capping is processed by three crimping roller through its rotation.

Machine Features：

- Continuous capping by three capping rollers, l-100ml container sizes applicable
- PLC controlled operation via touch screen, No Vai No Capping combined with safety alarm functions
- Multi container sizes applicable, less and quick changing of sizeparts
- Driving by the qualified stepless motor and electronic cam
- Long life of crimping roller, low container breakage and high successful capping rate
- Smooth capping edge, less particle generation
- Machine operation be possible in individual or synchronized

Technical Parameter

Model	SHH-ZG1
Speed	100pcs/min/10ml
Voltage	380V, 50Hz
Power consumption	About 2.5kw
Capping qualified rate	≥99.9%
Vials damage rate	＜0.01%
Noise	＜70dB
Weight	About 800KG
Transfer table height	FL＋950mm
Dimension	2700*1470*2600

Production Capacity

Model	2ml	5ml	10ml	15ml	20ml	50ml	100ml
SHH-ZG1	6000	6000	6000	5500	5000	3000	3000
SHH-ZG12	24000	24000	21000	18000	12000	7000	4800

SHH-AFS Series Glass Ampule Filling Sealing Machine



Main application

The linkage line consists of SHH-QCL series vertical ultrasonic washing machine, SHH-ASMR series hot air circulation sterilization tunnel, SHH-AFS series filling and sealing machine. The model can be used in combination or in a single machine. The linkage line can complete water spray filling, ultrasonic cleaning and flushing (internal and external), CA flushing (internal and external), preheating, drying and sterilizing to remove pyrogen, cooling, before and after nitrogen, sealing after preheating, sealing and other processes.

This line can meet the size ranging from 1 -20ml ampoule of washing, drying and sterilizing to remove pyrogen, filling and sealing requirements of the production process.

Characteristic

Vertical ultrasonic washing machine using ultrasonic rough washing, circulating water, WFI and clean compressed air sprays and cleans the container alternately. Gleaning clarity and visible material detection effect is ideal; It is one of the most popular cleaning machine in the world today.

The sterilization tunnel adopts the principle of hot air laminar flow and high temperature sterilization process to preheat, dry, sterilize, remove heat and sterilization process. It is one of the most popular drying and sterilizing machines in the world.

Filling and sealing machines adopts step-by-step bottle conveying, positioning filling, wire drawing and sealing. The sealing rate is high. It is one of the most popular filling and sealing machines in the world.

The interlocking production line adopts PLC control and touch screen operation, which can be used for linkage control or stand-alone operation. The control runs stably and with high automation.









Main technical parameters

Product model	SHH-AFS6	SHH-AFS8	SHH-AFS10	SHH-AFS12	SHH-AFS16
Suitable sizes (ml)	1 -20ml (ampoule)				1-10ml (ampoule)
Output (pcs/h)	6000-16000	8000-21000	10000-24000	12000-30000	16000-36000
Filling heads	6	8	10	12	16
Power supply	380V 50Hz				
Power capacity (kW)	78	78	80	90	90
Total weight (kg)	8900	8900	9400	9700	10100
Overall dimensions (mm)	9100x2200x2450	9100x2200x2450	9260x2200x2450	9910x2200x2450	10042x2200x2450

SHH Series Non-PVC Soft Bag IV Infusion Production Line



Characterstics:

SHH Series Non-PVC film soft bag iv infusion production line is designed and manufactured by Huiheng machinery co., ltd., Which is based on foreign advanced technology, meet with the requirements of domestic and foreign customers. Non-PVC multi-layer co-extruded film bag infusion, with the characteristics of non-toxic, strong compatibility with liquid, water barrier, long guarantee period, can resist 121℃ high temperature sterilization, anti-low temperature, easy to transport and empty bag recycling does not pollute the environment, which is the most popular soft bag infusion production line in the world.





Main Technical Parameters

SHH-RD single hard tube series of soft bag infusion production line

Product model	SHH-RD1200	SHH-RD2500	SHH-RD3500	SHH-RD4500	SHH-RD6000
Capacity (bags)	1200	2500	3500	4500	6000
Infusion bag specification (ml	100-1000ml	100-2000ml			100-500ml
Bag width of Infusion bag(mm)	120mm,135mm				
Filling accuracy	100ml±2%, 250ml±1.25%, 500ml±0.75%, 1000ml±0.5%, 2000ml±0.3%				
Power supply	380V 50Hz (customized)				
Power capacity(kw)	15	20	25	30	40
Total weight (kg)	2000	5000	6000	8000	10000
Overall dimensions (mm)	2940X2660X2250	6000X2660X2250	6100X2660X2250	7865X2660X2250	9090(10020)X2660X2250

SHH-RDS double hard tube series of soft bag infusion production line

Product model	SHH-RDS1000	SHH-RDS2000	SHH-RDS3000	SHH-RDS4000	SHH-RDS5000
Capacity (bags)	1000	2000	3000	4000	5000
Infusion bag specification (ml)	100-1000ml	100-2000ml			100-500ml
Bag width of Infusion bag(mm)	120mm 135mm				
Filling accuracy	100ml±2% 250ml±1.25%n 500ml±0.75% 1000ml±0.5% 2000ml±0.3%				
Power supply	380V 50Hz				
Power capacity (kw)	18	25	30	40	50
Total weight (kg)	2000	5500	6500	8500	11000
Overall dimensions (mm)	2940X2660X2250	6000X2660X2250	6100X2660X2250	7865X2660X2250	9090(10020)X2660X2250

Aseptic PP Bottle Moulding Washing Filling Stoppering Capping Production Line (ISBM)



Description

1. SHH-XGF PP Bottle LVP Wash-Fill-Seal Machine has three sections, ionic air washing or ionic air plus water washing, constant pressure filling, and hot melting sealing.

2. It can automatically finish the processes of bottle feeding, bottle entering, bottle reversing by manipulator, ionic air reversely blowing and washing, bottle conveying, fixed volume filling, cap sorting, cap feeding, simultaneously heating cap and bottleneck, air eliminating, hot melting sealing, bottle conveying out etc.

3. It is mainly applied to the washing, filling and sealing production for PP plastic soft and hard bottle large volume parenteral, like glucose infusion, sodium chloride infusion, sodium chloride and dextrose injection, metronidazole injection etc.

Main Features

1. Compact integrated design of wash-fill-seal with smaller production area
2. Applicable to any round or flat IV solution bottles with different shapes
3. Voice alarm when fault, and machine halt
4. PLC control, all operation data can be set, changed and kept on file
5. CIP/SIP on line

Main Technical Parameters

PP bottle LVP plastic bottle i.v. solution washing filling sealing labeling machine Technical Parameters

Item	Data
Production capacity	2000~20000 bottles/hour
Specification	50~1000ml round or other shape PP bottle
Bottle washing	ionic air washing, or ionic air and water washing
Main filling medium	Liquid such as large volume infusion
Filling error	±1%
Liquid filling temperature and pressure	40~55℃ 0.6~2kg/cm²
CIP/ SIP	125 ℃--30 min
Air consumption (clean air)	Pressure: 0.6~0.8Mpa 180(120)m³/h
Cooling water	250L/h, 15~20℃
Noise	max.75dB
Electric capacity	18~35KW

SHH Series Automatic Suppository Production Line







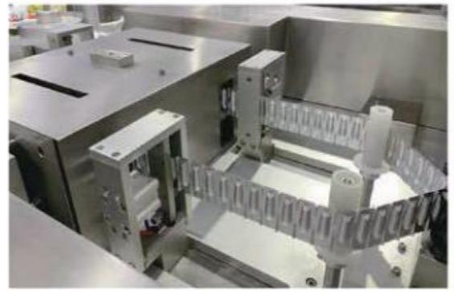

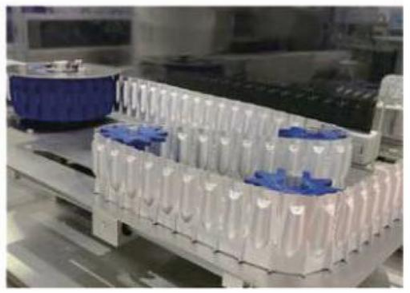

Description

Automatic suppository production line is suitable for the production of special shapes of slugs such as bullet shape, torpedo shape and duckbill shape, which can meet the production of suppositories of various shapes. (Make a mold according to the sample or requirement)

From the beginning of the automatic suppository shell molding, to the filling station of the liquid medicine, the recip rocating cooling setting (liquid conversion solid state), the continuous sealing, the batch number, the finished product cutting (the number of cutting particles is arbitrarily set on the touch screen, 1-10 Free cutting)

Main Technical Parameters

Name	Continuous fully automatic suppository production line		
Capacity	1,0000—30,000 pcs/h	single dosage	0.5—5ml
Dosage Allowed	< ±2%	packaging film	PVC\PE Thickness:0.15-0.18mm
Stirring tank capacity	70L	work pressure	More than≥0.7Mp■
Air comsumption	1.6m³/min	water consumption	50kg /h(recycle use)
Voltage	3p 380V(cust■mized)	Total power	7.5KW — 20 KW
Center distance	17.4mm	weight	2000kg — 3000kg
Shape	The bullet,torpedoes,duck bill and other various shapes		
Application	Synthetic fatty acid glycerides, glycerin,gelation and polyethylene glycol,etc		
Overall Size	Different models can be reasonably arranged according to workshop design		

SHH-SY Series Automatic Syringe Filling Stoppering Production Line







Brief Introduction:

The filling machine has: disassembling packing buffer and filling area. remove the wrapper manually in the buffer, in the filling area 1, the sealing paper and isolation paper are torn automatically. in the filling area 2, the honeycomb is removed from the packing box and placed on the filling platform by the manipulator. After filling, the honeycomb is placed into the original packing box by the manipulator and then transferred to the next process.

Characteristic:

1. Fully automatic pre-sterilized syringe filling machine, widely used for B-D Hypac SCF (pre-filling syringe) and honeycomb aseptic liquid filling, the maximum output can reach -6000 pieces/hour (filling liquid) (MAX)
2. Filling range: 1ml-10ml; (In order to ensure the accuracy of filling, the filling pump should be replaced according to the filling volume),
3. All parts in contact with liquid medicine are made of AISI316L stainless steel or ceramic materials, non-toxic corrosion-resistant non-metallic materials;
4. All operations are done by touch screen, adopt full servo CNC control system;
5. The matrix movement of the machine tray is completed by the servo motor (X axis, Y axis);
6. The tray loaded with the syringe to be filled is put into the tray bracket by the manipulator. After completing all the filling steps, the tray is taken out by the manipulator and put into another empty syringe tray. Filling: ceramic rotary valve pump controlled by independent servo motor (accuracy ±1%);
7. The rubber plug is automatically sent to the plug track and then to the plug remover through the oscillating plug plate. The plug remover takes 5 rubber plugs at a time and sends them to the plunger plate. After the plunger plate is turned over 180 degrees, the plunger rod is pressed into the syringe after filling through the plug sleeve (there will be bubbles between the rubber plug and the liquid medicine).
8. All actions are completed by the servo control system controlled by the program. The adjustment of the loading quantity and the position and distance adjustment of the filling needle, the plug rod and the plug sleeve can be realized on the touch screen without adjusting the machine. (This function has been the international leading level).
9. The whole operation of the machine is completed by the servo motor system. Easy to change specifications, can be preset on the touch screen multiple filling template.
10. Standard remote module, as long as plug in the network cable can realize remote maintenance, monitoring, programming and software upgrade.

Technical Parameter:

Applied Syringe	Glass Syringe	Glass Syringe Syringe (BD tube) 1-10ml
Capacity	2000-3000pcs/hour (Single refers to the time from the beginning of filling to the end of stuffing)	Ceramic rotary valve pump: 5000-6000 pieces/hour (1ml liquid filling, only from the beginning of filling to the end of the plug)
Filling nozzle	2 heads	5 heads
Plug head	2 heads	5 heads
Filling pump	Ceramic rotary valve pump	Ceramic rotary valve pump
Control and drive mode	Servo CNC control system (full servo type)	Servo CNC control system (full servo type)
Filling accuracy	±1% (liquid)	Ceramic rotary valve pump:±1% (each filling pump piston is driven by 1 servo motor)±1-±1.5% (5 filling pump pistons are driven by 1 servo motor)
Qualified Stoppering rate	≥99.9%	≥99%
Voltage supply	380V,50HZ	380V,50HZ
Power	7kw	8kw
Weight	1000kg	1300kg
Overall Size	1500mm×1280mm×2270mm（L×W×H）（Contained laminar flow cover）	3200mm×1600mm×2200mm（L×W×H）（Contained laminar flowcover）

SHH-CX Model Large Volume Liquid Filling Production Line



Description

The SHH-CX model large volume liquid production line is composed of the unscrambler (turntable), rotary type washing machine, depyrogenation tunnel (for glass container), ultrasonic washing machine, filling and stoppering machine, capping machine and labeling machine. This production line can be used to produce 30-500ml large volume infusion/ parenteral/ syrup in glass or plastic containers.

Performance Fertures

The SHH-CX model production line is suitable for filling-stoppering and sealing for containers of 30-500ml, and can be used for both glass and plastic containers with change-over format parts. This production line is featured by wide use and convenient adjustment. The production capacity of this compact line is affected by the size and specification of the container and the viscosity of the injection material.

Main Technical Parameter

Production Capacity(pcs/min)	80-120 (8-nozzle filling, 6-head capping) 40-60 (4-nozzle filling, single-head capping)
Cleanliness of Washing (%)	>99
Filling Accuracy (%)	0.2
Qualified Rate of Stoppering (%)	>98
Qualified Rate of Capping (%)	>98
Power (kw)	11
Overall Dimensions (mm)	9,740 x 1,470 x 1,785

Installation Layout

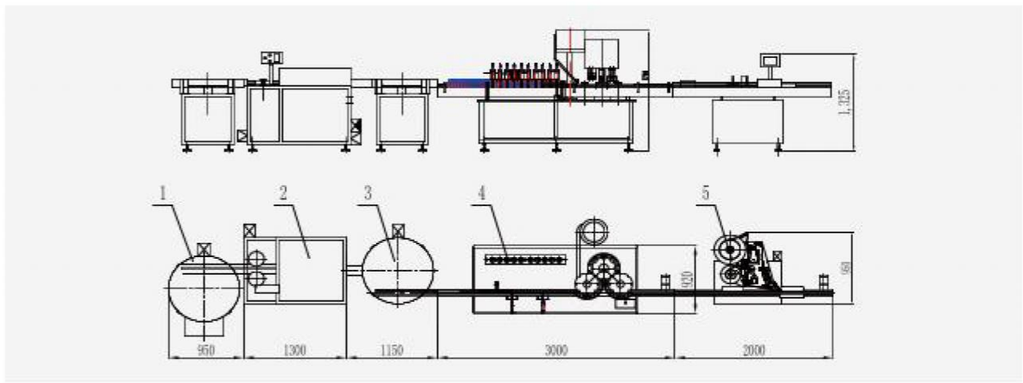

No.	Machine	Supply	Power (kw)	Weight (kg)
1	Turntable	220V,50Hz	0.25	100
2	Drum Type Washer	380V,50Hz	1	500
3	Turntable	220V,50Hz	0.25	100
4	Filling and Capping Machine	380V,50Hz	2	800
5	Vertical Labeling Machine	220V,50Hz	2	200

SHH-EDF Series Automatic High Speed Eye Drops Filling Capping Machine





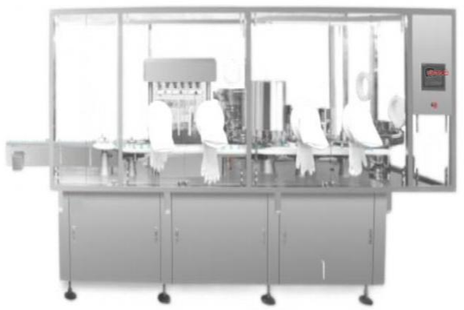









Description

This machine is suitable for 5-30ML of various materials of round flat plastic or glass bottles of eye drops, electronic cigarette oil and other filling. The high precision CAM indexing mechanism provides the indexing plate to locate the upper plug and cover; Acceleration CAM drive provides lifting of screw head; Constant torque screw cap; Peristaltic pump metering filling; Touch screen control. No bottle, no filling, no insert, outer cover. With accurate positioning, smooth transmission, protective bottle cap, accurate measurement. Simple operation and other advantages. Cylinder plug gland, grip manipulator screw cap, metal parts in contact with liquid are 316L material, moving parts are made of high-quality steel processing, the machine has a compact structure, reasonable layout, easy maintenance, and other equipment can be linked into line

Performance Fertures

1. Positioning and conveying bottle, simple structure, easy to maintain, no bottle, no bottle;
2. The machine adopts four-axis servo motion controller to drive by servo systems, the speed matching between needle holder and bottle mouth is accurate, and the man-machine interface of filling system adjusts the loading amount.
3. Using automatic plug, and cover,
4. Gloves
5. Capping system adopts magnetic capping, capping torque is adjustable, torque transmission is no contact, no wear, no particles fall off the risk of polluting products;
6. Filling servo
7. One-to-one drive
8. Ceramic pump Shupu/Jingzhuo
9. Hundreds of laminar flow

Main Technical Parameter

No.	Contents	Specification
3	Power	≤10KW
4	Average power	≤3KW
5	Process	vials distributing---filling----Stoppering droppers---Screw capping --- outfeeding ---buffertable
6	Vials	5ml-30ml
7	Capacity	10-20, 20-40, 30-60, 100-150, 150-300BPM（@5-10ml）
8	Filling accuracy	≤±1%（@5-10ml）
9	Percentage of pass	≥99.5%
10	Standard	GMP

Huiheng Pharma Machinery

上海晖恒制药机械有限公司

SHANGHAI HUIHENG PHARMACEUTICAL MACHINERY CO., LTD.

Sales HQ:

Add: Rm 808, No. 6088, Humin Road, Xinzhuang Town, Minhang District, Shanghai, China P.C.: 201100

Tel: +86-13166139318 Email: kevinpharmachinery@gmail.com

Web: www.huihengmachinery.com www.pharma-fillingmachine.com

Factory

Add : 1 F, Building 28, No. 6055 Jinhai Road, Fengxian District, Shanghai P.C.: 201400

Huiheng Pharma Machinery

FDA standard OSD equipment

Mainstream supplier of global OSD equipment

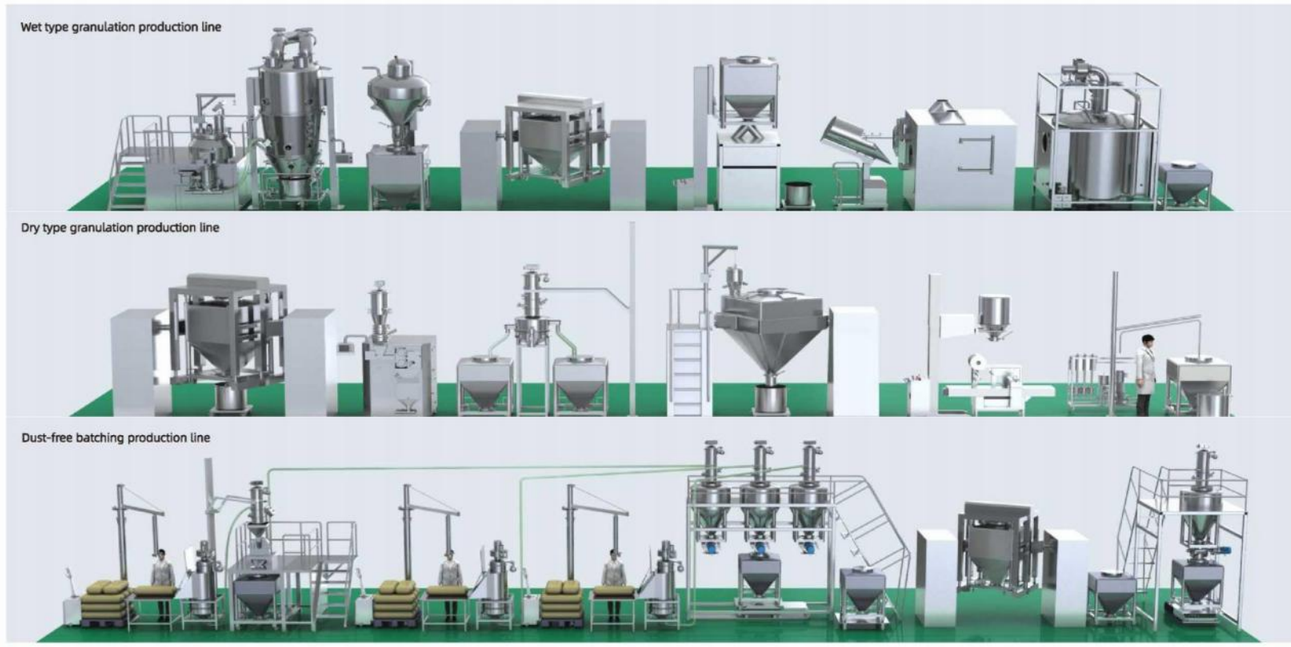

TECHNOLOGY LEADER INDUSTRY MODEL

PERISE IN PHARMACEUTICAL INDUSTRY

HUIHENG mainly provides the following equipments for domestic and foreign pharmaceutical enterprises:



About us

Shanghai Huiheng Pharmaceutical Machinery Co., Ltd. is a national high-tech enterprise specialized in R&D, manufacturing, sale and after-sale service of pharmaceutical machinery. Headquartered in Shanghai, HUIHENG is shouldering the mission of serving the pharmaceutical industry with advanced technology, and always follows the latest requirements from cGMP, FDA, PICs and other authorities.

HUIHENG mainly engaged in R&D, production, sales and service of aseptic injection filling production line, liquid vials, lyophilized vials, powder vials, small volume ampoules, oral liquid linkage line, PFS (pre-fill system), BFS (Blow- Fill -Sealing), PP bottle IV solution production line, large volume parenteral production line and Non-PVC film soft bag infusion production line, OSD series production line, automatic tablet/capsule counting filling production line, and automatic blister packing production line, etc. The company can provide professional and personalized filling system overall solution for pharmaceutical enterprises with our advanced R&D and design capability.

HUIHENG would adhere to the principle of “Innovation for Life”and apply its innovation expertise and scientific management concept to serve clients all over the world. Under the leadership of a united, enterprising and efficient management team, HUIHENG is making steady progress in a brilliant direction. The company is advancing itself to a higher goal in terms of capital operation, product structure adjustment, new product R&D, quality assurance and service network, so that each of our customers can use our products with confidence and pride.



Huiheng Pharma Machinery





Contents

About Us P02
SH-CG Series Closed Granulation Line P05
SH-LG Series High Shear Mixer Granulator P06
SHL Series Rapid Mixer Granulator P07
SHLS Series Lab Rapid Mixer Granulator P08
SHH-FL Series Fluid Bed Granulator P09
SHH-FG Series Fluid Bed Dryer P10
SHH-DPL Series Multifunctional Fluid Bed Granulator P11
SHH-DPLS Series Lab Multifunctional Fluid Bed Granulator P12
SHH-LG Series Roller Compactor P13
SHH-BG Series High-efficiency Coating Machine P14
SHH-BGB Series High-efficiency Coating Machine P15
SHH-BGBS Series Lab Coating Machine P16
SHH-BGBM Series Containment Coating Machine P17
SHH-YTG Series Fixed Lifting Machine P18
SHH-QXD Series Vertical Bin Cleaning Machine P19
IBC Bins P20
DP-IPTD Series Punch Tablet Press Machine P21
ZP130 Series Rotary Tablet Press Machine P22
ZPTX420G-15/17/19 Cantilever Type Double Discharge Tablet Press Machine P23
ZPT420D/Di Double Discharging Rotary Tablet Press Machine P24
GZPK370i-26/32/40 Series High-speed Tablet Press Machine P25
GZPK561-41/51/61/79 Automatic High-speed Tablet Press Machine P26
GZPK620-45/55/65 Double Discharge High-speed Rotary Tablet Press Machine P27
GZPK660-45/55/75 Auto Double Discharge High-speed Tablet Press Machine P28
NJP Series Fully Automatic Capsule Filling Machine P29/30
DTJ-D Semi-Automatic Capsule Filling Machine P31
SHH-C Series Tablet/Capsule CheckWeigher P32
SHH-CL Automatic Tablet & Capsule Counting Filling Machine Line P33/34
DPB-270/360JL ALU- PVC-ALU Blister Packing Machine P35/36
DPB-270/360J Cantilever Style Flat-Plate Blister Packing Machine P37/38
DPB360JV-ZHJ400D High Speed Blister Packing And Automatic Cartoning Production Line (Oral Liquid/Ampoule) P39/40
DPB-360JV Oral Liquid(Ampoule) Special Blister Packing Machine P41/42
DPB-420/520 Flat-Plate Soft Plastic Blister Packing Machine (Tyvek Paper) P43/44
P45
QVG Series Vacuum Conveying P46
Others

SH-CG Series Closed Granulation Line



Application

The closed granulation line has the functions of granulating, drying and cone mill. It is mainly used for powder granulation in the pharmaceutical, food, chemical and other industries.

Features

- Wall mounted design, space saving
- Closed transferring, improving operation efficiency and reducing the risk of material exposure
- Can set for batch continuous automatic production, making the production process more in line with GMP requirements
- Process control and PAT
- CIP cleaning
- Control system can optionally complying 21CFR Parti 1 requirements

Technical Parameter

Item Model	60	120	200
Production capacity (kg/batch)	15-60	50-120	120-200

Note: Our company can customize products according to user requirements.

SH-LG Series High Shear Mixer Granulator



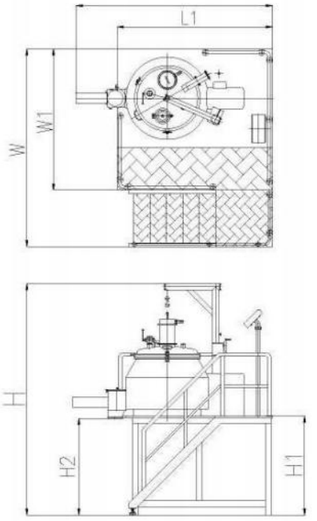

Application

It has many functions such as mixing, granulating, wet cone mill, etc. It has been widely used in pharmaceutical, food, chemical industry, etc.

Features

- Higher working platform, better for connecting with FBD to discharge
- Compact structure
- Tangential impeller
- WIP system
- Good reproducibility
- Can connect with fluid bed dryer to form a fully closed granulating production Line
- Fully meet FDA,CGMP,GMP
- Control system can optionally complying 21 CFR Parti 1 requirements

Technical Parameter

Item Model		SHLG-100	SHLG-150	SHLG-200	SHLG-300	SHLG-400	SHLG-500	SHLG-600	SHLG-800	5HLG-1000
Production capacity(kg/batch)		20-40	30-60	40-80	60-120	80-160	100-200	120-240	160-320	200-400
Mixing motor power (kW)		n	15	22	30	30	37	45	55	75
Mixing impeller rotation speed (rpm)		0-200	0-200	0-200	0-200	0-200	0-170	0-170	0-150	0-120
Granulating motor power(kW)		4	5.5	5.5	7.5	7.5	7.5	7.5	11	15
Granulating chopper speed (rpm)		0-2900	0-2900	0-2900	0-2900	0-2900	0-2900	0-2900	0-2900	0-2900
Wet Co-mill power(kW)		2.2	2.2	3	4	4	5.5	5.5	5.5	5.5
Wet Co-mill rotation speed(rpm)		0-900	0-900	0-900	0-900	0-900	0-900	0-900	0-900	0-900
Compressed air consumption (m3/min)		0.4	0.4	0.6	0.6	0.6	1	1	1	1
Compressed air pressure (MPa)		03-0.6	0.3-0.6	0.3-0.6	0.3-0.6	0.3-0.6	03-0.6	0.3-0.6	0.3-0.6	0.3-0.6
Weight(kg)		1200	1500	1800	2000	2200	2500	3000	3500	4000
Dimensions (mm)	L	2200	2365	2580	2580	2605	2780	2780	2980	3180
	LI	1800	1800	2000	2000	2000	2200	2300	2500	2700
	W	2300	2400	2400	2600	2600	2800	2800	2900	3100
	W1	1500	1600	1600	1800	1800	2000	2000	2100	2300
	H	2600	2600	3050	3050	3050	3050	3050	3250	3350
	HI	1400	1400	1400	1400	1400	1400	1400	1600	1600
	H2	1360	1360	1360	1360	1360	1370	1370	1570	1570

Note: Our company can customize products according to user requirements.

SHL Series Rapid Mixer Granulator



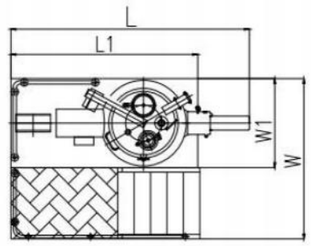

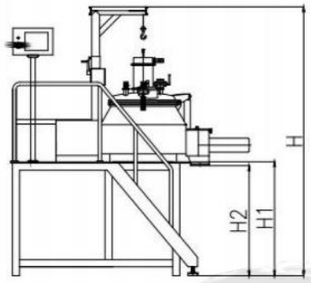

Application

it has many functions such as mixing, granulating, etc. it has been widely used in pharmaceutical, food, chemical industry, etc.

Features

- Lower working platform, mainly suitable for lower room height
- Compact structure
- Tangential impeller
- WIP system
- Good reproducibility
- Can connect with fluid bed dryer to form a fully closed granulating production line
- Fully meet FDA,CGMP,GMP
- Control system can optionally complying 21CFR Parti 1 requirements

Technical Parameter

Item	Model	SHL-100	SHL-150	SHL-200	SHL-300	SHL-400	SHL-500	SHL-600	SHL-800
Production capadty(kg/batch)		20-40	30-60	40-80	60-120	80-160	100-200	120-240	160-320
Mixing motor power(kW)		11	15	22	30	30	37	45	55
Mixing impeller rotation speed(rpm)		0-200	0-200	0-200	0-200	0-200	0-170	0-170	0-150
Granulating motor powerfkW)		4	5.5	5.5	7.5	7.5	7.5	7.5	11
Granulating chopper speed(rpm)		0-2900	0-2900	0-2900	0-2900	0-2900	0-2900	0-2900	0-2900
Compressed air consumptionfmVmin)		0.4	0.4	0.6	0.6	0.6	1	1	1
Compressed air pressure (MPa)		03-0.6	03-0.6	03-0.6	0.3-0.6	03-0,6	0.3-0.6	03-0.6	0.3-0.6
Weight (kg)		1000	1300	1600	1800	2000	2200	2700	3200
Dimensions (mm)	L	2300	2465	2580	2680	2705	2880	2880	3080
	LI	1900	1900	2000	2100	2100	2300	2400	2600
	W	1600	1600	1800	1800	2000	2150	2150	2200
	W1	900	900	1000	1000	1200	1350	1350	1400
	H	2500	2550	2930	2930	2930	3050	3050	3250
	H1	1050	1050	1280	1280	1280	1400	1400	1600
	H2	1010	1010	1240	1240	1240	1370	1370	1570

Note: Our company can customize products according to user requirements.

SHLS Series Lab Rapid Mixer Granulator





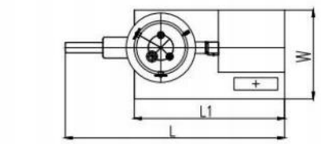

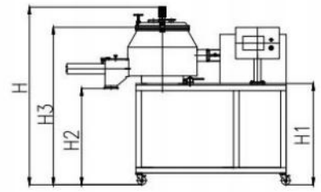

Application

The machine is mainly suitable for small batch granulation process in the R&D. The powder material and the binder are mixing at high speed by the mixing impeller inside the granulating pot, and then cutting into uniform wet granules by the side high speed chopper. The purpose of the granules is one of the process equipment commonly used in the production of solid preparations in the pharmaceutical industry, and is widely used in the pharmaceutical, food, chemical and other industries.

Features

- Movable with heavy duty wheels, with brake
- Compact structure and space saving
- Good reproducibility and safety interlocking system
- With interchangeable granulating pots for different capacity
- Can optionally with transparent glass pot Lid for better viewing
- Fully meet FDA,CGMP,GMP
- Control system can optionally complying 21 CFR Parti 1 requirements

Technical Parameter

ttem	Model	SHLS-1	SHLS-3	SHLS-6	SHLS-10	5HLS-15	SHLS-25	5HLS-50
Production capacrty(kg/batch)		0.2-0.4	0.6-1.2	1.2-2.4	2-4	3-6	5-10	10-20
Mixing motor powerfkW)		1.1	1.1	1.1	1.5	4	4	4
Mixing impeller rotation speed(rpm)		0-400	0-400	0-400	0-400	0-220	0-220	0-220
Granulating motor power(kW)		0,75	0.75	0.75	1.1	2.2	2.2	2.2
Granulating chopper speed(rpm)		0-2840	0-2840	0-2840	0-2840	0-2840	0-2840	0-2840
Compressed air consuniption(m3/niin)		0.1	0.1	0.1	0.1	03	0.3	0.3
Compressed air pressure(MPa)		03-0.6	0.3-0.6	03-0.6	0.3-0.6	03-0.6	0.3-0.6	03-0,6
Weight(kg)		220	250	270	300	400	430	450
Dimensions (mm)	L	1375	1400	1425	1450	1530	1580	1630
	LI	1000	1000	1000	1000	1100	1100	1100
	W	700	700	700	700	750	750	750
	H	1100	1110	1120	1140	1250	1300	1600
	HI	750	750	750	750	750	750	750
	H2	730	730	730	730	720	720	720

Note: Our company can customize products according to user requirements.

SHH-FL Series Fluid Bed Granulator





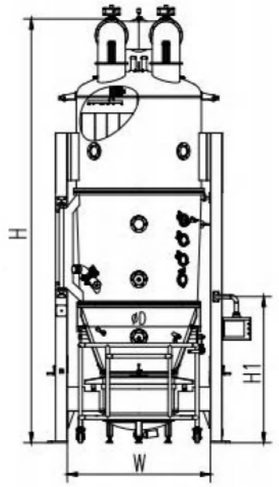

Application

The machine is a process machine widely applied for solid preparation production in the pharmaceutical industry. It has mixing, drying, granulating functions. It is also widely used in such industries as medicine, chemical industry, food, etc.

Features

- with top spraying system for granulation
- Two heating modes alternative, such as electric heating or steam heating
- PID precision control
- High processing efficiency, with closed online sampling
- Ex-proof system/anti-10 or 12 bar/final dedusting system/dehumidifier system are available
- WIP system/PAT are available
- Fully meet FDA, CGMP, GMP
- Control system can optionally complying 21CFR Parti 1 requirements

Technical Parameter

Item	Model	FL-15	FL-30	FL-60	FL-120	FL-200	FL-300	FL-500
Material chamber volume(L)		45	100	220	330	577	980	1530
Production capacity(kg/batch)		5-15	15-30	30-60	60-120	120-200	200-300	300-500
Fan power(kW)		7.5	11	18.5/22	22/30	30/37	37/45	75
Electric heating power(kW)		30	30	30	45	80	90	120
Steam pressure (MPa)		0.4-0.6	0.4-0.6	0.4-0.6	0.4-0.6	0.4-0.6	0.4-0.6	0.4-0.6
Steam consumption (kg/h)		180	180	300	360	420	480	677
Compressed air pressure (MPa)		0.4-0.6	0.4-0.6	0.4-0.6	0.4-0.6	0.4-0.6	0.4-0.6	0.4-0.6
Compressed air consumption (m3/min)		0.4	0.9	0.9	1.0	1.0	1.5	1.8
Weight (kg)		800	1000	1200	1400	2000	2500	3500
Dimensions (mm)	H	3114	3234	4154	4708	4840	5365	6000
	HI	1850	1850	1850	1850	1850	1850	1850
	OD	578	772	1022	1024	1378	1580	1868
	W	984	984	1340	1540	1540	1840	2240

Note: Our company can customize products according to user requirements.

SHH-FG Series Fluid Bed Dryer



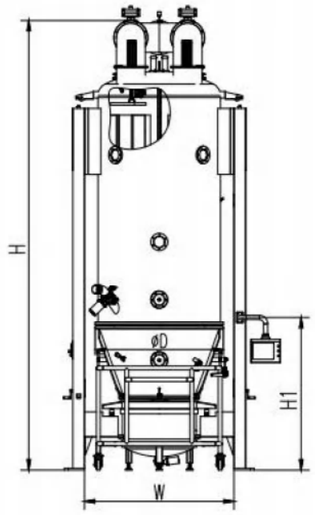

Application

The machine is a process machine widely applied for solid preparation production in the pharmaceutical industry. It has mixing and drying functions. It is also widely used in such industries as medicine, chemical industry, food, etc.

Features

- Two heating modes alternative, such as electric heating or steam heating
- PID precision control
- High processing efficiency, with closed online sampling
- Ex-proof system/anti-10 or 12 bar/final dedusting system/dehumidifier system are available
- WIP system/PAT are available
- Fully meet FDA, CGMP, GMP
- Control system can optionally complying 21 CFR Parti 1 requirements

Technical Parameter

Item	Model	FG-15	FG-30	FG-60	FG-120	FG-200	FG-300	FG-500
Material chamber volume(L)		45	100	220	330	577	980	1530
Production capacity (kg/batch)		5-15	15-30	30-60	60-120	120-200	200-300	300-500
Fan power(kW)		7.5	11	18.5/22	22/30	30/37	37/45	75
Electric heating power(kW)		30	30	30	45	80	90	120
Steam pressure (MPa)		0.4-0.6	0.4-0.6	0.4-0.6	0.4-0.6	0.4-0.6	0.4-0.6	0.4-0.6
Steam consumption (kg/h)		180	180	300	360	420	480	677
Compressed air pressure (MPa)		0.4-0.6	0.4-0.6	0.4-0.6	0.4-0.6	0.4-0.6	0.4-0.6	0.4-0.6
Compressed air consumption (m3/min)		0.4	0.9	0.9	1.0	1.0	1.5	1.8
Weight(kg)		800	1000	1200	1400	2000	2500	3500
Dimensions (mm)	H	3114	3234	4154	4708	4840	5365	6000
	HI	1850	1850	1850	1850	1850	1850	1850
	(DD	578	772	1022	1024	1378	1580	1868
	W	984	984	1340	1540	1540	1840	2240

Note: Our company can customize products according to user requirements.

SHH-DPL Series Multifunctional Fluid Bed Granulator



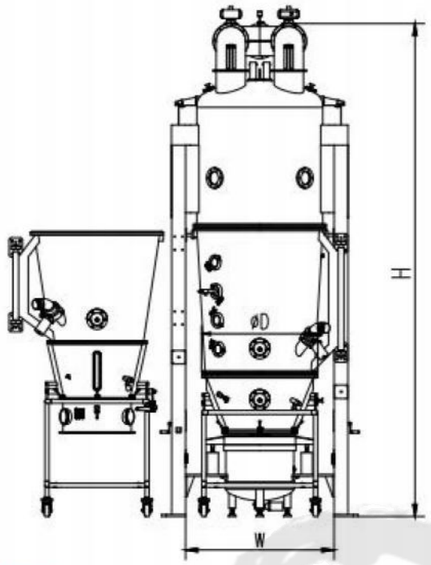

Application

The machine is a process machine widely applied for solid preparation production in the pharmaceutical industry. It has mixing, drying, top granulating and bottom coating functions. It is also widely used in such industries as medicine, chemical industry, food, etc.

Features

- With top spray for granulating and bottom spray for pellet coating
- Two heating modes alternative, such as electric heating or steam heating
- PID precision control
- High processing efficiency, with closed online sampling
- Ex-proof system/a nti-10 or 12 bar/final dedusting system/dehumidifier system are available
- WIP system/PAT are available
- Fully meet FDA, CGMP, GMP
- Control system can optionally complying 21CFR Parti 1 requirements

Technical Parameter

Item	Model	DPL-30	DPL-60	DPL-120	DPL-200	DPL-300
Chamber volume (L)	Bottom spray	80	150	330	417	760
	Top spray	100	220	330	577	980
Production capacity	Bottom spray	15-20	15-30	30-60	60-100	100-190
(kg/batch)	Top spray	15-30	30-60	60-120	120-200	200-300
Fan power(kW)		11	18.5/22	22/30	30/37	37/45
Electric heating power(kW)		30	30	45	80	90
Steam pressure (MPa)		0.4	0.4-0.6	0.4-0.6	0.4-0.6	0.4-0.6
Steam consumption (kg/h)		180	300	360	420	481
Compressed air pressure(MPa)		0.4-0.6	0.4-0.6	0.4-0.6	0.4-0.6	0.4-0.6
Compressed air consumption(m3/min)		0.6	0.9	1	1	1.5
Main machine weight(kg)		1200	1600	1800	2300	2500
Dimensions (mm)	H	3374	4353	4908	5040	5865
	OD	772	1022	1024	1378	1580
	W	984	1340	1540	1540	1840

Note: Our company can customize products according to user requirements.

SHH-DPLS Lab Multifunctional Fluid Bed Granulator



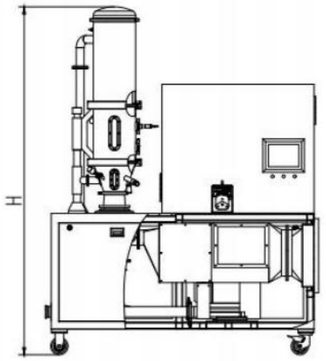

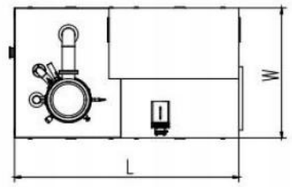

Huiheng Pharma Machinery

Application

It has many functions such as mixing, drying, top spraying granulation, bottom spraying coating, etc. It has been widely used in pharmaceutical, food, chemical industry, etc.

Technical Parameter

Item	Model	DPLS-1	DPLS-3	DPLS-5
Chamber volume(L)	Top spray	3	9	16
	Bottom spray	3	9	14
Production capacity (kg/batch)	Top spray	0.3-1	1-3	3-5
	Bottom spray	0.3-0.75	1-2	1-3
Compressed air	Pressure(MPa)	0.4-0.6		
	Air consumption (m7min)	0.15	0.6	0.6
Electric heating power(kW)		4	9	12
Hot air temperature adjusting range (°C)		normal temperature-120		
Hot air filtering precision		HEPA		
Fan power(kW)		2.2	5.5	7.5
Dimensions (mm)	w	855	1100	1200
	H	2375	2510	2825
	L	1600	1900	2100
	OD	256	300	400
Referenced weight (kg)		700	800	850

Note: Our company can customize products according to user requirements.

SHH-LG Series Roller Compactor



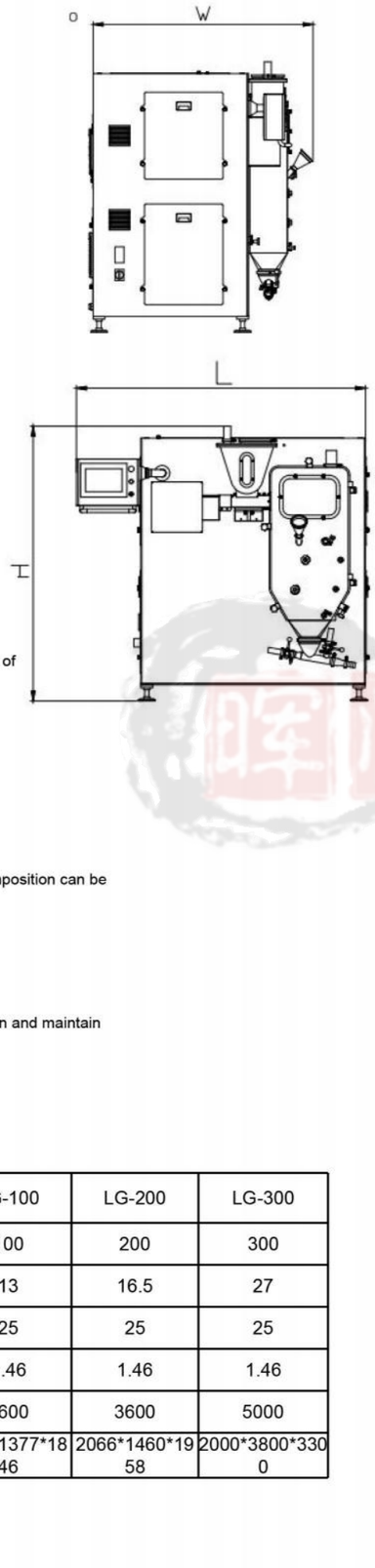

Application

Roller compactor adopts continuous loading and discharging, integrates the compacting, cutting and granulating mill functions, directly makes powder into granules. It is especially suitable for granulation of materials which are thermo-sensitive and humidity sensitive, easily broken down or agglomerated. It has been widely used in pharmaceutical, food, chemical and other industries. In the pharmaceutical industry, granules made by the roller compactor can be directly pressed into tablets or filled into capsules.

Features

- 3 functions in one unit: compacting, cutting, granulating mill
- Simplified process to obtain highly stable granules.
- No water or other liquid is added and need drying, so the Loss of active ingredients due to decomposition can be eliminated
- Rollers with a water circulating cooling system
- Rollers available with different types: smooth, anilox, curie
- Overall modular design, compact structure, better space utilization
- The power area is separated from the work area to prevent cross contamination
- Horizontal screw feeding structure, exposed installation of compacting roller system, easy to clean and maintain
- With vacuum air exhaust for feeding system
- Fully meet GMP requirements
- Control system complying 21 CFR Part 11 requirements

Technical Parameter

Item Model	LG-15	LG-30	LG-60	LG-100	LG-200	LG-300
Loading capacity (kg/h)	15	30	60	100	200	300
Total power (kW)	3	3.5	11.5	13	16.5	27
Max pressure of roller (MPa)	13	13	25	25	25	25
Water chiller power (kW)	1.46	1.46	1.46	1.46	1.46	1.46
Weight (kg)	800	1000	2200	2600	3600	5000
Dimensions (L*W*H)(mm)	1020*1120*1620	1200*920*1600	1580*1100*1600	1899*1377*1846	2066*1460*1958	2000*3800*3300

SHH-BG Series High-efficiency Coating Machine

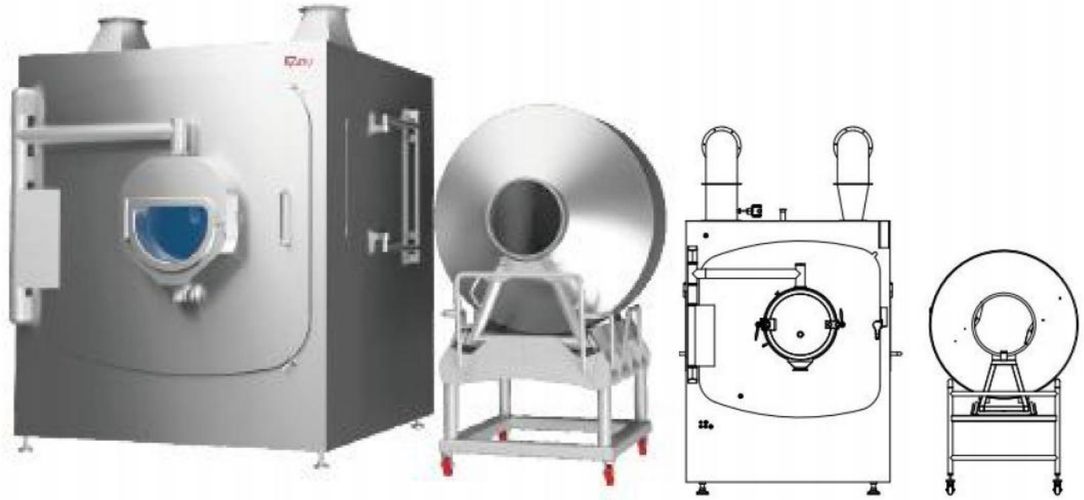

Application

The new type auto coating machine is designed for coating process solutions for all kinds of tablets, pills, granules, which can promote the coating production efficiency and guarantee material stability. Reliable process, interchangeable pan design, CIP design and good appearance conform to the requirements of GMP. Varieties of functions make the batch production time shorten, Satisfying different process requirements. It is the best choice for film coating, sugar coating.

Features

- Overall open design on the front side
- Easy cleaning, no dead corner
- Wide install area and maintenance space and pans can be replaceable a unique airbag seal structure, fully enclosed chamber
- It adopts HMI and PLC automatic control system, can optionally comply 21 CFR Part 11 requirements

Tipping lifting feeder

- Achieving smoothly loading tablet into the coating pan
- Prevent fragments and bracts because of the height difference colliding
- Auto lifting and tipping, the tablets can slide into the coating pan evenly and slowly

Technical Parameter

Item Model	BG-75F	BG-150F	BG-250F	BG-350F	BG-600F
Production capacity(kg/batch)	75-40-20	150-75-40	250-150-75	350-250-150	600-350
Main machine motor power(kW)	1.5	2.2	3	4	5.5
Drum rotation speed (rpm)	2-24	2-15	2-15	2-15	2-10
Hot air fan power(kW)	1.1	1.1	1.5	2.2	5.5
Exhaust fan power (kW)	4	5.5	7.5	11	15
Peristaltic pump power(kW)	0.04(BT100L)	0J(WT300F)	0.1(WT300F)	0.1(WT300F)	0.1(WT600F)
Steam consumption(kg/h)	95	95	169	225	252
Air consumption(m3/min)	1.18	1.45	2.03	2.03	2.57

SHH-BGB Series High-efficiency Coating Machine



Application

The BGB-D coating machine is mainly used in medicine and food industries. Meeting GMP requirements, it is a kind of mechanically and electrically integrated coating equipment with high efficiency, energy conservation, good safety and good cleanliness for organic film coating, water soluble coating, dripping pill coating, sugar coating, chocolate and candy coating.

Features

- The streamlined diversion plate improve the rate of finished products, reducing broken edges. The narrow upper surface of the diversion plate design improve the adhesion of excipient, saving the excipient and improving medicine quality.
- The constant pressure variable peristaltic pump is used to replace the return flow. The rotation radius of the pan changes with the change of pressure, the output solution and spray volume are automatically balanced, the spray system is optimized, the blocking of the spray gun is avoided, the excipient is saved. Easy to clean without any dead corners.
- It adopts the new type spray gun with even atomizing, large spraying area, adjustable direction. The nozzle is not affected by the loading volume, the anti-blacked device can ensure continuous coating, shorten coating time and save coating excipient.
- Easy and fast for charging and discharging
- Both film coating and sugar coating are available
- Ex-proof system/ dehumidifier system / CIP system are available
- It adopts HMI and PLC automatic control system, can optionally comply 21 CFR Part 11 requirements.

Technical Parameter

Item	Model	BGB-75D	BGB-150D	BGB-250D	BGB-350D	BGB-600D
Production capacity(kg/batch)		75	150	250	350	600
Main machine motor power(kW)		1.5	2.2	3	4	5.5
Drum rotation speed(rpm)		2-17	2-15	2-15	2-15	2-10
Hot air fan power(kW)		1.1	1.1	2.2	2.2	5.5
Exhaust fan power(kW)		4	5.5	7.5	n	15
Peristaltic pump power(kW)		0.04(BT100L)	0.1(WT300F)	0.1(WT300F)	0.1(WT300F)	0.1(WT600F)
Steam consumption(kg/h)		95	95	169	225	252
Air consumption(m3/min)		1.18	1.45	2.03	2.03	2.57
Main machine weight(kg)		550	900	1250	1650	2000
Dimensions(mm)		1200*980*1853	1570*1250*2351	1800*1434*2458	2050*1670*2570	2050*2064*2680
CIP Station	Power (kW)	3	3	3	3	3
	Water consumption(t/h)	10	10	10	10	10

Note: Our company can customize products according to user requirements

SHH-BGBS Series Lab Coating Machine





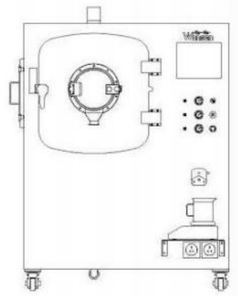

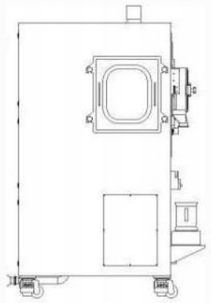

Huiheng Pharma Machinery

Application

The BGB-S coating machine is mainly used in medicine and food industries. Meeting GMP requirements, it is a kind of mechanically and electrically integrated coating equipment with high efficiency, energy conservation, good safety and good cleanliness for organic film coating, water soluble coating, dripping pill coating, sugar coating, chocolate and candy coating.

Features

- Suitable for R&D scale
- interchangeable coating pans can be replaced according to the different batch size
- Easy operation of replacing the interchangeable coating pans
- With compact and integrated structure, air intaking at the clean area, saving space
- With movable heavy duty wheels with brake
- It adopts HMI and PLC auto control system, can optionally comply 21 CFR Part 11 requirements

Technical Parameter

Item Model	BGB-5S	BGB-10S	BGB-205	BGB-40S
Production capacity(kg/batch)	5-3-1	10-5-3	20-10-5	40-20
Main machine motor power(kW)	0.37	0.55	0.55	1.10
Drum rotation speed (rpm)	3-30	3-30	2-26	2-26
Air inlet fan power (kW)	0.37	0.37	0.37	0.75
Air exhaust fan power (kW)	0.75	1.5	2.2	3
Peristaltic pump power (kW)	0.04(OEM794)	0.04(OEM794)	0.04(BT100)	0.04(BT100)
Electric heating power (kW)	5	10.5	10.5	14.7
Compressed air consumption (m3/min)	0.45	0.65	0.65	0.65
Main machine weight (kg)	450	450	500	600

Note: Our company can customize products according to user requirements

SHH-BGBM Series Containment Coating Machine



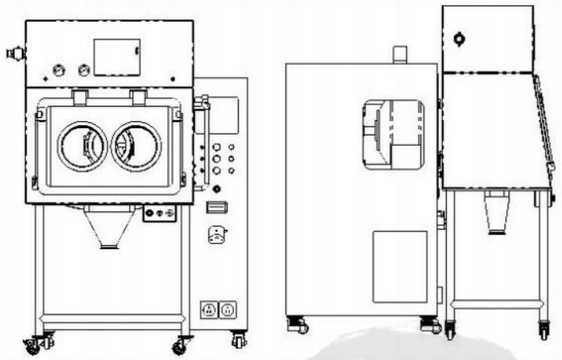

Application

The containment coating machine is mainly suitable for tablet coating of API materials. The isolation system ensures the safety of operators, materials and environment, and realizes multiple coating process.

Features

- Containment coating process, complying OEB4 and OEB5
- Lighting: illuminance^3001x
- Reserving detection port of dust particle, floating bacteria and sedimentation bacteria
- Reserving port for sterilization
- WIP misting system
- Push-push filter for getting rid of dust
- Interchangeable coating pans can be replaced according to the different batch size
- It adopts HMI and PLC automatic control system, can optionally comply 21 CFR Part 11 requirements

Technical Parameter

Item Model	BGB-5M	BGB-10M	BGB-20M	BGB-40M
Production capacity (kg/batch)	5-3-1	10-5-3	20-10-5	40-20
Main machine motor power (kW)	0.37	0.55	0.55	1.10
Drum rotation speed (rpm)	3-30	3-30	2-26	2-26
Hot air fan power (kW)	0.37	0.37	0.37	0.75
Exhaust fan power (kW)	0.75	1.5	2.2	3
Peristaltic pump power(kW)	0.04(BT100L)	0.04(BT100L)	0.04(BT100L)	0.04(BT100L)
Electric heating power (kW)	5	10.5	10.5	14.7
Steam consumption (kg/h)	67	90	90	90
Air consumption (m3/min)	0.45	0.65	0.65	0.65
Main machine weight (kg)	450	450	500	600

Note: Our company can customize products according to user requirements

SHH-YTG Series Fixed Lifting Machine



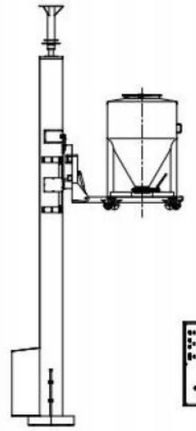

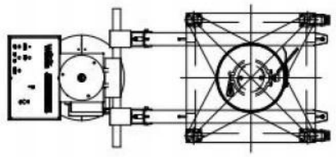

Application

The machine is mainly used for conveying and loading solid materials in the pharmaceutical industry. It can work with the mixer, tablet pressing, capsule filling, packing machines, etc. It is also widely used in such industries as medicine, chemical industry, food, etc.

Huiheng Pharma Machinery

Features

- With fixed and positioning design, safe and stable performance
- Special design to loading materials for tablet pressing, capsule filling and packing machines
- Ease for lifting IBC bins to Loading in a closed system
- Anti-falling device
- Labor saving
- It can turn 180°
- Hydraulic and electric lifting are alternative
- Electric Lifting model can adopt HMI and PLC control system, can optionally comply 21 CFR Part 11 requirements

Technical Parameter

Model	Lifting type	Max net loading(kg)	Power(kW)	H	HI	L
YTG-200	Hydraulic	200	3	Designed according to URS		
	Electric		2			
YTG-300	Hydraulic	300	3			
	Electric		2			
YTG-400	Hydraulic	400	3			
	Electric		2			
YTG-500	Hydraulic	500	3			
	Electric		2			
YTG-600	Hydraulic	600	3			
	Electric		2			
YTG-800	Hydraulic	800	3			
	Electric		2			
YTG-1000	Hydraulic	1000	3			
	Electric		2			
YTG-1200	Hydraulic	1200	3			
	Electric		2			
YTG-1500	Hydraulic	1500	3			
	Electric		2			
YTG-2000	Hydraulic	2000	5.5			
	Electric		3			
YTG-2500	Hydraulic	2500	5.5			
	Electric		3			

Note: the above motor power is determined according to the actual situation (lifting height, net loading)

SHH-QXD Series Vertical Bin Cleaning Machine



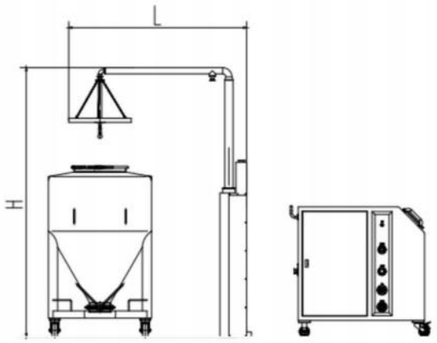

Application

This machine is mainly used for transferring and mixing bins cleaning in the production process of solid preparations. The lifting arm extends the cleaning ball into the bin for cleaning. It can be adapted to bins of different specifications and is an ideal equipment for bin cleaning.

Features

- Manual lifting and automatic lifting is alternative
- Suitable for cleaning IBC bins of different specification sizes
- HMI and PLC control, cleaning easily, can optionally complying 21CFR Part 11 requirements

Technical Parameter

Item	Model	QXD-5	QXD-10
Pumpflow(t/h)		5	10
Pump power(kW)		1.5	3
Pump pressure(MPa)		0.6	0.6
Weight(kg)		130	130
Dimensions	L	1700	1700
(mm)	H	2600	2600

Note: Our company can customize products according to user requirements.

IBC Bins

SINGLE COLUMN LIFTING MIXING BIN



AUTOMATIC LIFTING MIXING BIN

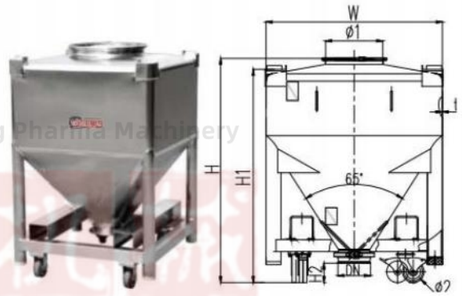

SQUARE CONE IBC BIN



ROUND CONE IBC BIN



Tedmical Parameter

Model	Volume (L)	W	H	HI	H2	A	t	Φ1	Φ2	DN	Weight (kg)
HZTD-100	100	550	920	635	180	640	2	300	100	150	155
HZTD-200	200	700	960	700	150	790	2	400	100	200	185
HZTD-300	300	720	1150	760	180	820	2.5	400	125	200	200
HZTD-400	400	800	1190	800	147	910	2,5	400	125	200	220
HZTD-600	600	1000	1300	960	161	1120	2.5	500	125	200	245
HZTD-800	800	1000	1500	960	150	1120	2.5	500	125	200	250
HZTD-1000	1000	1100	1630	1060	181	1220	3	500	125	200	265
HZTD-1200	1200	1200	1740	1160	200	1320	3	500	125	200	280

Technical Parameter

Model	(L)	W	H	HI	H2	t	Φ1	Φ2	DN	(kg)
HZT-400	400	800	1270	1210	ISO	2.5	400	125	200	150
HZT-600	600	1000	1280	1210	130	2.5	400	125	200	185
HZT-800	800	1000	1480	1420	130	2.5	400	125	200	200
HZT-1000	1000	1180	1490	1430	130	3	500	150	200	245
H2T-1200	1200	1180	1640	1580	130	3	500	150	200	260
HZT-1500	1500	1180	1850	1780	130	3	500	150	200	280
HZT-2000	2000	1180	2210	2130	130	3	500	150	200	310

Technical Parameter

Model	Volume (L)	W	H	HI	t	Φ1	Φ2	DN	Weight (kg)
ZT-200	200	600	1140	185	2	400	125	150	145
ZT-300	300	800	1180	210	2.5	400	125	200	160
ZT-400	400	800	1320	220	2.5	400	125	200	180
ZT-600	600	1000	1450	230	2.5	500	125	200	200
ZT-800	800	1000	1650	230	2.5	500	125	200	220
ZT-1000	1000	1200	1590	200	2.5	500	150	250	262
ZT-1200	1200	1200	1720	200	2.5	500	150	250	280
ZT-1500	1500	1200	1950	200	2.5	500	150	250	315
ZT-1800	1800	1200	2160	200	3	500	150	250	335
ZT-2000	2000	1200	2290	200	3	500	150	250	370

Technical Parameter

Model	Volume (L)	H	t	Φ1	Φ2	Φ3	DN	Weight (kg)
ZTY-200	200	1050	2	750	125	400	200	89
ZTY-400	400	1287	2.5	B50	125	400	200	126
ZTY-600	600	1457	2.5	1000	125	500	200	178
ZTY-800	800	1530	2.5	1100	125	500	200	190
ZTY-1000	1000	1615	2.5	1250	150	500	250	262

DP-IPTD Series Punch Tablet Press Machine







This model is a IPDT single Station press that is specially designed for used In Laboratory of production in small batches.
It can press all kinds of granular materials into round tablets.
The machine can be equipped with one unit of punch an die with both the filling depth an thickness of the tablet adjustable.
The outer appearance of the machine is well designed with a compact structure.
It features a number of advantages such as reasonable layout, small dimension and large pressure.
It is a small size equipment that Compliance with GMP requirements.

Technical parameters

Model	DP12	DP 50 IPTD
Max Pressure (kn)		50
Max Dia. of Tablet (mm)	12	25
Max Depth of Filling(mm)	11	20
Max Thickness of Tablet(mm)	0.5-6	0.5-8
Production Capacity (pc/h)	3600	3600
voltage (v)	220/380	
Motor Power(kw)	1.0	1.5
Overall Size(mm)	550×450×560	580×500×830
Weight(kg)	100	150

ZP130 Series Rotary Tablet Press Machine

This machine is a new generation product of our factory, and it is a continuous and automatic rotary tablet press for pressing various kinds of different shape tablets and also plain tablets. It is mainly used in pharmaceutical industry and the chemical, food, plastics, powder, metallurgy and electronic industries.

CHARACTERISTICS

- Design of GMP;
- High quality all stainless steel constructions
- Reliable safety sealing system and dust-proof system;
- High visibility isolated door to prevent cross contamination;
- Easily remove parts for quick machine's maintenance.



Technical parameters

Model	ZP5A	ZP7A	ZP9A	ZP10A	ZP12A	ZP5B	ZP7B	ZP9B	ZP10B	ZP5D	ZP7D	ZP9D
Dies (sets)	5	7	9	10	12	5	7	9	10	5	7	9
Max Pressure (kn)	40					50				40		
Max Dia. of Tablet (mm)	13					20				13		
Max Thickness of Tablet(mm)	6					6				6		
Max Depth of Filling(mm)	15					15				15		
Turret Speed(r/min)	32					25				32		
Production Capacity (pc/h)	9600	13440	17280	19200	23040	7500	10500	13500	15000	9600	13400	17280
voltage (v)	220/380					220/380				220/380		
Motor Power(kw)	1.5					2.2				1.5		
Overall Size(mm)	640×480×1100					700×530×1210				540×380×900		
Weight(kg)	260					300				140		

ZPTX420G-15/17/19 Cantilever Type Double Discharge Tablet Press Machine



Product Features

• Super high pressure, ideal equipment for large size tablet production.
• Cantilever design, beautiful, generous, simple.
• Double outlet, both sides of the sheet, high production efficiency.
• ZPT mould is adopted. Dust ring is installed on the upper turntable and oil ring can be installed on the upper punch rod to effectively prevent oil contamination of tablets.
• Touch screen control, easy to operate and realize production automation. No handwheel operation, roller, metering position adjustment using motor control , adjustment speed and accuracy are improved.
• Frequency control device is used for electrical speed regulation, which is convenient to operate, stable in rotation and safe for preparation.
• Equipped with plexiglass window, the side panel can be opened completely, which is easy to clean and maintain.
• The forced feeding. device controls the powder flow and filling to ensure the feeding accuracy. The feeder is easy to be disassembled and the platform is easy to adjust
• With central automatic lubrication system.

Optional function

• The pressure of each punch is detected and displayed on the touch screen
• It can realize the automatic compensation of powder
• Automatic elimination of out of tolerance tablets, more accurate tablet production
• There are two channels for finished products and waste products in the film output device, and the waste pieces can be removed

Technical parameters:

Model	15G	17G	19G
Quantity of Punch & Die (set)	15	17	19
Max Pressure (kn)	150	150	120
Max Dia. of Tablet (mm)	50	40	13
Max. Thickness of Tablet (mm)	15	15	30
Max. Depth of Filling (mm)	15-35	15-35	15-35
Rotate speed (r/min)	5-15	5-15	5-18
Production Capacity (pc/h)	27000	30600	41040
voltage (v)	380/50	380/50	380/50
Motor Power(kw)	7.5	7.5	5.5
Overall Size(mm)	1240×980×1650	1240×980×1650	1240×980×1650
Weight(kg)	1850	2000	2000

ZPT420D/Di Double Discharging Rotary Tablet Press Machine



Product Features

• Peripheral casing is closed form which is made of all stainless steel, internal mesa adopt stainless steel material, it can keep the surface glossy and prevent cross contamination and meet GMP requirement.
• It is equipped with organic glass and visual window， visual tablet state,all of the side plate can turn on and clear up and maintenance is easy.
• All controller and operating parts are rational layout.
• It is equipped with variable frequency speed control device for electrical control, convenient operation, steady running, it is safe and accurate.
• It is equipped with overload protection device, when pressure overload, it can stop automatically.
• It is the mechanical and electrical integration， has touch key and screen display.
• Be the leader in trying to use semi-automatic lubrication device and the top of rotary table is equipped organic glass dust prevention device.
• Transmission system is sealed on the main tank below, is a safe separation of independent components, also has no cross pollution, and transmission of infiltration in the oil pool, easy to has heat output and also it is wearable.
• it is equipped with powder absorbing device , can absorb indoor dust .
• Wearing parts like orbit, feeder, hopper, drive worm, powder taking equipment and it has general structure with ZP33 type product, it is helpful for standardization， generalization and seriation.

Technical parameters

Model	ZPT31Di	ZPT39Di
Quantity of Punch & Die (set)	31	39
Max Pressure (kn)	80	60
Max Dia. of Tablet (mm)	20	13
Max. Thickness of Tablet (mm)	6	6
Max. Depth of Filling (mm)	15	15
Rotate speed (r/min)	3-35	3-35
Production Capacity (pc/h)	130200	163800
voltage (v)	380/50	380/50
Motor Power(kw)	4	4
Overall Size(mm)	1240×980×1650	1240×980×1650
Weight(kg)	1850	1850

GZPK370i-26/32/40 Series High-speed Tablet Press Machine



Main Features

- Adopts PLC control with auto protective function;
- Touch screen operation. Operation menu is easy tounderstand;
- Force-feeding unit with a good applicability to powder;
- Central auto lubrication system;
- Main and pre-pressing, tablets formed twice;
- No handwheel operation, the position adjustment and metering adjustment of pressure wheel are all controlled by motor, the speed and precision of adjustment are greatly improved.

Unique features

- Auto compensation of powder;
- Monitoring pressure of each punches and displays the pressure on the touch screen. There are two chutes for qualified tablets and defective tablets. Defective tablets can be rejected from one chute.

Technical Parameters

Model	GZPK26i	GZPK32i	GZPK40i
No. of stations	26	32	40
Output range (Tablet pc/h)	20000-171600	25000-211200	31000-264000
Rotation speed range (rpm)	13-110rpm		
Main pressure	100KN		
Pre-pressure	16KN		
Max Filling depth	20mm	16mm	
Tablet thickness range	1-8mm		
Diameter of die	Φ25mm	Φ16mm	Φ13mm
Max length of irregular tablet	＜25mm	＜19mm	＜16mm
Diameter of die	Φ38.1mm	Φ30.16	Φ24
Diameter of punch	Φ25.35	Φ19mm	Φ19mm
length of punch	133.6mm		
Noise	≤70db		
Main motor power	7.5kw		
Dimension	820×1100×1750mm		
Weight	1800kg		

GZPK561-41/51/61/79 Automatic High-speed Tablet Press Machine



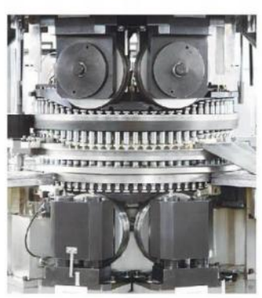



Technique advantages

- Interchangeable turret. Convenient for machine clean and change over, which improves the production efficiency;
- Vertical powder feeding and large diameter hopper can handle powder with bad fluidity suitable for pressing not granulated powder;
- Full servo control for press rollers position and dosing adjustment. High precision;
- Pressure of all the 3 roller can be displayed. convenient for adjustment;
- No hand wheel operation. All operation information can be shown and adjusted on screen;
- Equipped with electronic records and electronic signatures, which meets the FDA'S requirement.

- Each tablet is pressed by 3 same size rollers.
- Each rollerpressure can reach 10OKN, which largely extended the tablet forming time.
- 3-roller technology provides anew solution for pressing twolayers tablets.

Technical Parameters

Model	GZPK-41	GZPK-51	GZPK-61
No. of stations	41	51	61
Tooling type	D	B	BB
Turrel rotation speed (R.P.M)	9-90		
Output range (Tablet pc/h)	22140-221400	27540-275400	32940-329400
Main motor power	11KW		
First station pressure	100KN		
Second station pressure	100KN		
Third station pressure	100KN		
Max. tablet diameter	25mm	16mm	13mm
Max. length of irregular tablet	25mm	19mm	16mm
Max. filling depth for first layer	19mm	19mm	15mm
Max. filling depth for second layer	6-8		
Max. tablet thickness	12mm		
Dimension of machine	1180×1180×2035mm		
Dimension of control cabinet	890×510×1200mm		
weight	4000kg		

GZPK620-45/55/65 Double Discharge High-speed Rotary Tablet Press Machine



GZPK620 Series double discharge high-speed rotary tablet press, the machine adopts the structure design of double forced feeding and double discharge, punch circling round to complete the process of filling, measuring, prepressing, main pressure and sheet, etc. Maximum production can reach 580,000 tablets per hour. The performance of the equipment is stable, the machine runs smoothly and the noise is low. Replace a set of guide rail, can press the double layer.

Main Features

- Comply with GMP specification requirements, compact mechanism, reliable performance, simple operation.
- Man-machine interface touch screen software operation control, easy to operate, with fault point self-diagnosis function.
- Touch screen hydraulic control of main pressure wheel pressure and pre-pressure wheel pressure.
- Film weight automatic detection function, waste film automatic identification and elimination function.
- Up AND down over tight protection, electric control system protection, overload stop protection, forced feeding motor overload protection, low gas pressure protection, system fault automatic alarm protection.
- Automatic lubrication system.
- Production information can be displayed, printed and stored.

Technical parameters

Model	GZPK45	GZPK55	GZPK65
No. of stations	45	55	65
Output range (Tablet pc/h)	400000	490000	580000
Max filling depth	20mm	16mm	
Max. Major Pressure (kn)	100KN		
Max. Pre-pressure (kn)	16KN		
Max length of irregular tablet	1-8mm		
Round tablet diameter	25mm	16mm	13mm
Max length of irregular tablet	＜25mm	＜17mm	＜14mm
weight tolerance	±3%		
Noise	≤80db		
Motor Power (kw)	11kw		
Dimension of machine	1400×1500×1900		
weight	3300kg		

GZPK660-45/55/75 Auto Double Discharge High-speed Tablet Press Machine



GZPK660 Series Automatic double discharge high-speed rotary tablet press, the machine adopts double forced feeding double sheet structure design. the machine adopts the structure design of double forced feeding and double discharge, punch circling round to complete the process of filling, measuring, prepressing, main pressure and sheet, etc. The performance of the equipment is stable, the machine runs smoothly and the noise is low. Replace a set of guide rail, can press the double layer.

Main Features

- Double - out three - wheel packing system, balanced powder density.
- Man-machine interface touch screen software operation control, easy to operate, with fault point self-diagnosis function.
- Touch screen hydraulic control of main pressure wheel pressure and pre-pressure wheel pressure, low noise.
- No handwheel control, servo motor control filling system, fast response.
- Film weight automatic detection function, waste film automatic identification and elimination function.
- Up AND down over tight protection, electric control system protection, overload stop protection, forced feeding motor overload protection, low gas pressure protection, system fault automatic alarm protection.
- Automatic lubrication system, through automatic control to ensure that each lubrication point get regular and quantitative lubrication.
- Production information can be displayed, printed and stored.

Technical parameters

Model	GZPK45	GZPK47	GZPK55
No. of stations	45	47	55
Output range (Tablet pc/h)	432000	451200	528000
Max filling depth	20mm		18mm
Max. Major Pressure (kn)	100KN		
Max. Pre-pressure (kn)	20KN		
Max length of irregular tablet	1-8mm		
Round tablet diameter	25mm		16mm
Max length of irregular tablet	＜25mm		＜18mm
weight tolerance	±3%		
Noise	≤80db		
Motor Power (kw)	11.5-13kw		
Dimension of machine	1260×1260×1950		
weight	3950kg		

NJP Series Fully Automatic Capsule Filling Machine











Capsule transmit deivce

Huiheng Pharma Machinery



Capsule up and down mould blocks



Double capsule transmit device

Features

NJP series fully automatic capsule filling machine are newly invented machine, which is produced to meet high production capacity requirement on the basis of the original NJP series capsule filling machine. This machines has dual capsule turn around device, and dual capsule hole moulds. It can increase the production capacity without increase operator and space.

This machine is designed further improved on the base of original full auto, capsule filling machine from home and aboard, with high technology and exclusive performance. It is function can reach international leading lvvel, it is an ideal equipment for capsule and medicine in pharmaceutical industry. It's performance and feature as follows:

- Good-looking appearance, exquisite workmanship, simple to operate, easy to use.
- Stowage seat and measuring plate are designed as one unit to make measuring plate and stowage rod without deviation, Phenomenon avoid friction Phenomenon between stowage rod and measuring plate, improve its precision highly, furthermore, it prolongs the machine's life greatly.
- Ineligible capsule can be eliminated automatically(qualified rate not included), the medicine in the capsule can be recycled and be reused thus it can increase greatly heconimic efficiency.
- Simplicity and convenience of dismantling, installation and clean, various models of mould can be replaced each other, the mould of 80 model and 1000model as well as 1200 model can be replace mutually on the same machine to meet different requirement of capacity.
- Dust collector and vacuum pipe as well as waste air Pipe are installed in the inner of the machine to avoid the air pipe becoming hard, bard broken and leakage etc phenomenon, it is more convenient to clean the platform. Furthermore, it accords with the requirement of GMP that medicine can not contact with organic material.
- The cap of stowage rod is made of stainless steel which replaces original plastic cap to void breaking Phenomenon; the screws and caps on the platform lesser to make the whole appearance more good-looking.

Main Technical Parameters

Machine Model	NJP800	NJP1000	NJP1200	NJP2500	NJP3800	NJP7500
Capacity(capsule/min)	800	1000	1200	2500	3800	7500
Quantity Of Die Holes	6	8	9	18	27	54
Capsule Size	NO.00-5					
Filling Precision	＞99%					
Electric Power Supply	380V50HZ					
Noise	＜80dBA					
Vacuum Degree	0.02-0.06Mpa					
Degree Of Power(kw)	5.5kw			6.74 kw	9.5 kw	10.5 kw
Overall Dimension(mm)	970 ×820 × 1900			1150 × 1040 ×2230	1430 × 1280 ×2080	1700 × 1220 ×2015
Weight(kg)	900kg			1400kg	2400kg	3400kg

DTJ-D Semi-Automatic Capsule Filling Machine



Features

This machine is suitable for filling various domestic or imported capsule. The machine adopts electricity, gas control, electronic device equipped with automatic counting, It can automatically finish the action of location, separation, filling, locking etc for capsule, it can reduce labor cost, improve production efficiency, according with the requirement of medicine sanitary. It is an ideal equipment with smartness accuracy for dosage, novel structure, good-looking, easy to operation, for filling capsule medicine in pharmaceutical industry.

Main Technical Parameters

Max. Productive Capacity	12500 pcs/h
Capsule Size	0# 1# 2# 3# 4# hard capsule
Power	2.2kw
Power Supply	380V 50Hz
Overall Dimensions	1200 ×700 × 1600mm(L ×W × H)
Weight	330kg

SHH-C Series Tablet/Capsule CheckWeigher



Purpose

It is used to check the amount of hard capsules, the weight of hollow capsules or tablets in large batches, and to eliminate unqualified products.

Main parameters

Weight detection range: 10-2000mg, maximum detection accuracy: 0.5mg.

Technical Parameters

Model No.	Capsules	Tablets	Accuracy/mg
	Throughput /pcs/min(hour)	Throughput /pcs/min(hour)	
SH-C900	600 (36000)	400 (24000)	0.5
	900 (54000)	600 (36000)	1.0
SH-C1800	1200 (72000)	800 (48000)	0.5
	1800 (108000)	1200 (72000)	1.0
SH-C2700	1800 (108000)	1200 (72000)	0.5
	2700 (162000)	1800 (108000)	1.0
SH-C3600	2400 (144000)	1600 (96000)	0.5
	3600 (216000)	2400 (144000)	1.0
SH-C4500	3000 (180000)	2000 (120000)	0.5
	4500 (270000)	3000 (180000)	1.0
SH-C5400	3600 (216000)	2400 (144000)	0.5
	5400 (324000)	3600 (216000)	1.0
SH-C6300	4200 (252000)	2800 (168000)	0.5
	6300 (378000)	4200 (252000)	1.0
SH-C7200	4800 (288000)	3200 (192000)	0.5
	7200 (432000)	4800 (288000)	1.0

SHH-CL Automatic Tablet & Capsule Counting Filling Machine Line





Huiheng Pharma Machinery

Machine Description

The electronic counting machine is a kind of light and compact counting and filling equipment for solid particles. It adopts the internationally advanced 16-channel vibration, computer control, dynamic scanning counting, automatic bottle conveying and photoelectric control. It is designed in strict conformance with GMP standard and equipped with intelligent safety protectiondevices such as system self-inspection, error warning and automatic shutdown. As a high-tech material counting and fillingmachine, the JF-16 is widely used in pharmaceutical, food, chemical and other industries to count and fill tablets, capsules,pills, food, health care products and other materials.

Main features

1.Three-stage vibrators：With 16-channel vibration, materials are distributed more evenly.
2.Reliable operation：It runs stably and smoothly with low noise.
3.High dust resistance：It adopts unique anti-dust photoelectric sensor.
4.Accurate counting：Due to photoelectric sensor detection and imported large PLC counting, bottle-filling error meets the international standard.
5.Optional function：If special components are added, it can possess functions such as rejecting unqualified capsules or tablets and photoelectric detection alarming for lack of bottles or bottles being blocked.
6.Simple operation：With intelligent design, various operating parameters can be set in advance, including at most 15 sets in memory.
7.Easy maintenance：The operator only requires simple training as the disassemble, cleaning and replacement of parts are easy to carry out without the need of tools.
8.Sealed and dustproof ：It is equipped with a dust box to reduce dust pollution.
9.The platform height can be adjusted according to the bottle height.
10.The machine is equipped with a power supply voltage stabilizing system, so it can still work normally in areas with unstable power supply.

Product Paramenters

Model	SHH-8	SHH-12	SHH-16	SHH-24	SHH-32
Capacity	Max.40 bottles /min	20-50 bottles /min	40-80 bottles /min	50-100 bottles /min	60-180 bottles /min
Size of capsule	#00-#5 Capsule	#00-#5 Capsule	#00-#5 Capsule	#00-#5 Capsule	#00-#5 Capsule
Voltage	AC220V,50Hz	AC220V,50Hz	AC220V,50Hz	AC220V,50Hz	AC220V,50Hz
Power	600 W	800 W	1200 W	1500 W	2200 W
Air consumption	0.4 M3/h	0.5 M3/h	0.6 M3/h	0.6 M3/h	0.8 M3/h
Hopper Volume	30 ltrs	30 ltrs	40 ltrs	40 ltrs	60 ltrs
Overall Dimension	1360*1650*1650 mm	1360*1650*1650 mm	1760*1650*1650 mm	1760*1650*1650 mm	2160*1650*1650 mm
Weight	300 Kg	380 Kg	550 Kg	580 Kg	850 Kg

DPB-270/360JL ALU- PVC-ALU Blister Packing Machine

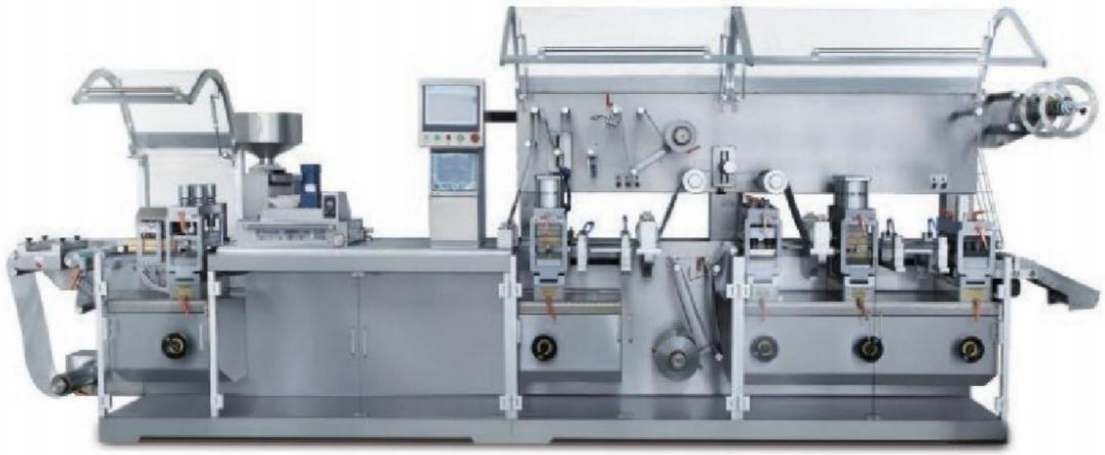



Tropical ALU forming and heat sealing station



Change punch mould without tools





This machine adds forming and sealing of tropical aluminum on the basis of 270/360J series blister packing machine in order to enhance the effect of sealing, moisture proof and light-avoiding, to improve product quality. It is widely used to pack products in pharmaceutical and heath care industry.

Technical characters

- Adopts the theory of 270J series blister packing machine ,rail type, adjustable mould convinent,accurate positioning.
- It adopts body separeated mechanism to avoid inconvenience of transfer due to the length of the body 1.88m by adding the forming and sealing stations.
- This machine use servo double traction structure, it can avoid bubble break when the machine stops. It also can conveniently realize photocell register function, and serve air clip drive function. At the meanwhile, it is covinent to reset the traction length on the human-computer interface when change mould.

Main Technical Parameter

Model	DPB-270JL	DPB-360JL
Punch Frequency	10-35 Times/min	10-35 Times/min
Capacity	5400 Blister/h (按3版/次 30次/分计算)	7200 Blister/h (按4版/次 30次/分计算)
Max Forming Area Depth	Standard≤250 × 110mm , Max 250×140mm	Standard)≤340 × 110mm, Max340×140mm
Standard travel range Stroke	Standard 30-120mm, Max160mm	
Standard Blister	70 ×98mm(can be designed as user's requirements)	
Main Motor Power	2.2kw	2.2kw
Total Power	380V/220V 50HZ 12kw	380V/220V 50HZ 15kw
Packing Material	PVC Hard sheet: 0.15-0.5 ×270mm	PVC Hard sheet: 0.15-0.5 ×360mm
	PTP Aluminum foil: 0.02-0.035 ×270mm	PTP Aluminum foil: 0.02-0.035 ×360mm
	Dialysis Paper: 50-100g ×270mm	Dialysis Paper: 50-100g ×360mm
	Tropical ALU: 0.09-0.15 ×270mm	Tropical ALU: 0.09-0.15 ×360mm
	Average hole diameter of roll 70-76mm	
Mould Cooling	60L/h tap water or recycle water	
Overall Dimension (L ×W × H)	5360 ×850 × 1750mm	5360 ×950 × 1750mm
Air Supply	0.6-0.8Mpa 18m^3/min	0.6-0.8Mpa 18m^3/min
Weight	4000kg	4500kg

Huiheng Pharma Machinery

DPB-270/360J Cantilever Style Flat-Plate Blister Packing Machine






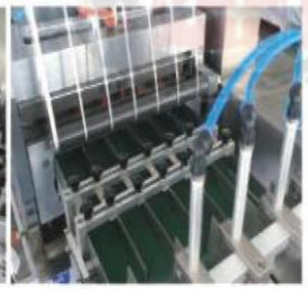

Application

Forming mould, heat-sealing mould, batch number emboss printing mould and punching mould all adopt drawer type mould change with national patent to achieve high efficiency.

- This machine is applied to alu pvc and alu alu packing of medicines, for example sealed blister packing of capsules and tablets of various specifications.
- Applied to sealed blister packing of various syringes, ampoule bottles and medical products.
- Applied to sealed blister packing of food, electronic parts, hardware products, etc.

Technical characters

- Main drive: Main motor located at the back of machine, easy for maintenance. Synchronous belt drive instead of chain belt drive to reduce oil stain.
- Guide rail installation method: Guide rail of the cabinet is installed in cantilever way. It is convenient for the operator to clean the dropped medicine.
- Mould base installation and adjustment: Adopt lathe type guide rail and pinion-and-rack adjustment way. With position indicator and scale ruler for mould position adjustment.
- All moulds including forming mould, heat-sealing mould, batch number emboss printing mould, punching mould can be orientation-guidedly pushed into its position by hand and mould handle rocked to finish mould change fastly without wrench or other tools.
- Adopt air shaft to install PVC material and aluminium foil.
- Adopt PVC connection device to change roll material more fast.
- PVC loading adopt roller trace to avoid PVC material being over-stretched during material pulling.




Huiheng Pharma Machinery

Main Technical Parameter

Model	DPB-270J	DPB-360J
Punch Frequency	10-70 times/min	10-70 times/min
Capacity	9600-12000 Blister/h(Standard 80 ×57mm)	12000-15000版/时 Blister/h(标准 Standard 80 ×57mm)
Max Forming Area Depth	standard 110×260 × 13mm, customized 150×260 ×26mm (Punching frequency<25times/min)	
Standard travel range	20-120mm(can be designed as user's requirements)	
Standard Blister	80 ×57mm(can be designed as user's requirements)	
Air Supply	≥ 18m3/min (自备) 0.6Mpa-0.8Mpa	
Total Power	380V/220V 50HZ 12KW	380V/220V 50HZ 15KW
Main Motor Power	2.2KW	2.2KW
PVC Hard Sheet	0.15-0.5 ×270mm	0.15-0.5 ×360mm
PTP Alminum Foil	0.02-0.35 ×270mm	0.02-0.35 ×360mm
Cold Forming Aluminum Foil	0.14-0.20 ×270mm	0.14-0.20 ×360mm
Dialysis Paper	50-100g/m2 ×270mm	50-100g/m2 ×360mm
Mould cooling	tap water or recycle water 60L/h	tap water or recycle water 60L/h
Overall Dimension(LxWxH)	4400 ×850 × 1750mm	4400 ×950 × 1750mm
Weight	2800kg	3700kg

DPB360JV-ZHJ400D High Speed Blister Packing And Automatic Cartoning Production Line (Oral Liquid/Ampoule)



Application

This production line is suitable for medicine especially oral, ampoules blister packing and automatic cartoning. Automatic ispection and rejection, automatic robot to feeding bottle, the robot automatically put straw, automatic high speed cartoning machine packs blisters and leaflets into cartons and seal the carton, then emboss batching No. The entire process is automatically controlled to save labor. The high automation and purgate also make machine more in line with GMP standard.

Huiheng Pharma Machinery







Robot Feeder

Technical characters

- Flat-Plate blister Packing meets requirements for Various depth of medicine Packing.
- International brand grasping bottles is safe and reliable.
- DPB-360J blister Packing machine is fast and convenient to change moulds
- Unique straw feeding device,designed specifically for the oral liquid.
- Upgraded production line with full safety cover to enhance Safety
- Multi synchronous servo linkage to ensure stable operation.
- Cantilever structure with Patent to accord more with GMP standard.

Main Technical Parameter

Blister packing machine

Max Capacity	16-26 times/min
Packing Material	Standard PVC hard sheet:0.15-0.5 ×360mm
	Standard PTP alurinamfoil:0.02-0.035 ×360mm
	Average hole diameter of roll:70-76mm
Air Consumption	≥30m³/h (self-provided) pressure: 0.6-0.8Mpa
Mould Cooling	Tap water or recycle water 60L/h
Total Power	15kw
Weight	3500kg
Overall Dimension	12000 × 1500 × 1850(L ×W × H)



Servo Mechanical hand



Bottle press and mechanical inspection



Synchronous feeding device

Main Technical Parameter

Automatic cartoning machine

Max Capacity	400 boxes per minute
Carton Size	Max. 200 × 120 ×60mm
Leaflet Size	Min. 50 ×20 × 15mm(长×宽L×W)
	Max. 260 × 180mm
	Min. 115 × 100mm(长×宽L×W)
Air Consumption	≥5m³/h (self-provided) pressure: 0.6-0.8Mpa
Total Power	5kw
Weight	3500kg

DPB-360JV Oral Liquid(Ampoule) Special Blister Packing Machine







Application

This production line is suitable for medicine especially oral, ampoules blister packing and automatic cartoning. Automatic ispection and rejection, automatic robot to feeding bottle, the robot automatically put straw, automatic high speed cartoning machine packs blisters and leaflets into cartons and seal the carton, then emboss batching No. The entire process is automatically controlled to save labor. The high automation and purgate also make machine more in line with GMP standard.



Servo Mechanical hand



Synchronous feeding device

Technical characters

- Flat-Plate blister Packing meets requirements for Various depth of medicine packing.
- International brand grasping bottles is safe and reliable.
- DPB-360JV blister Packing machine is fast and convenient to change moulds
- Unique straw feeding device,designed specifically for the oral liquid.
- Upgraded production line With full safety cover to enhance safety.
- Multi synchronous servo linkage to ensure stable operation.
- Cantilever structure with patent to accord more with GMP standard.

Main Technical Parameter

Model		DPB-360JV
Punch Frequency		16-26 times/min
Packing Material	Standard PVC Hard Sheet	0.15-0.50 ×360 mm
	Standard PTP Aluminum Foil	0.02-0.035 ×360 mm
	Average Hole Diameter Of Roll	70-76 mm
Max. Forming Area		150 ×350mm(Customized allowed)
Max. Forming Depth		26mm
Traction Stroke		Punch:20-160mm(Customized allowed)
Total Power		380V/50Hz 15KW
Air Consumption		30m³/h(self-provided) Pressure：0.6-0.8Mpa
Mould Cooling		Tap water or recycle water 60L/h
Overall Dimension(L ×W × H)		6200 ×950 × 1760 mm(L×W×H)
Weight		3500kg

DPB-420/520 Flat-Plate Soft Plastic Blister Packing Machine (Tyvek Paper)











▲ Mechnical hand automatic feeding ▲ No needle rejection deivce ▲ Ink jet printing with X, Y direction

Application

- This machine is widely used in paper-PE blister packing for medical appliances(Such as syringe needle, injector, pledget)
- It can continuously finish the full processing of heating in machine for PE film, forming the blister, filling appliances, sealing, batch number printing, vertical and horizontal cutting and output the final product.
- This machine adopts PLC controller, human-machine interface, servo motor system,photocell register system, andoptional with online printing system.

Main features

- Adopt servo motor with chain to be traction device, adjustable stroke.
- Equip with cursor device to ensure the packing pattern locate well and truly.
- The position of printing and slitting could be adjust freely.
- Mould is located by male pin, and is convenience to change mould.

Main Technical Parameter

Package Scope	Suitable for package of many kinds of sensitive and anti-pollution materials, medical appratus and instruments Chinese and western medicine, electron, chemical products and foodstuff etc.
Capability	6-12 (times/minute) (1) needle 40 Syringes/time
	(2) syringe 1ml 22 Syringes/time 2.5ml 20 Syringes/time
	(3) 5ml 18 Syringes/time, 10ml 16 Syringes/time
Package Materials	Paper-plastic, plastic-plastic and other compoubd film suitable for sealing(or the hard plastic less than 0.2mm), Width of the upper film is 400(500)mm and lower is 420(520)mm
Maximum Inner Dimensions	420型: 375 ×375 ×50mm; 520型: 375 ×475 ×50mm(L ×W × D) (standard model) If need More larger forming areas, can be design end in addition
Overall Dimension	420型: 6478 × 1150 × 1621.5mm 520型: 6478 × 1270 × 1621.5mm(L ×W × H) (can be designed as user's requirements)
Total Power	380V/220V 50Hz 16kw
Air Suppil	0.3m^3/min (self-provided) ; Pressure: 0.6-0.8Mpa
Mould Cooling	Tap water or recyle water 60L/h
Weight	420型: 1700kg 520型: 2000kg

SHH-YZ Series Directional Capsule Printing Machine



SHH-YZ uses the cap oriented system and two-color printing device . it can be used for single-or two-color printing on capsule caps of various specifications and types, and is able to achieve two-color directional printing at single act. due to its particular advantages, this machine can meet the requirements of pharmaceutical manufacturers to dose medium small batch quantity. It is cost effective and practical, an ideal printing machine for capsules and pharmaceutical manufacturers.

Uses: this machine is suitable for directional single-color or double-color printing of capsules of various specifications and models.

Features:

- Single-track two-color directional printing,
- Intaglio transfer printing,
- Clear, effective, quality
- Easy to operation.

Technical Specification

Printing yield	< 180000-200000pill/h
Circumferential capsule printing range	< 330 degree
Power source	AC, 380V, 50H
Power consumption	1.5 KW
Nondirectional capsule testing device	Adoption
Ink remover	Adoption
Weight	0.5 T
Overall dimension	2110mm×400mm× 1860mm

QVG Series Vacuum Conveying



The third era vacuum convey or uses multi-stage ejector pump and metal filter. Our products are the third era products. We develop the vacuum conveyor follow the combination of the aerospace and international GMP criterion strictly. Our technology has achieved international advance level. Our products can solve the stratification of powder and granules, and eliminate the static electricity.

Product Features:

- Using compressed air as primary energy sources.
- According with GMP standard.
- Solving the stratification of powder and granules.
- The filters made of Ti will never be jammed and be abraded.
- Eliminate the static electricity.
- Made of nontoxic and corrosion resistant materials.
- Leakage free capsule, to prevent cross contamination.
- Materials are not adhering to the inner surface of the conveyor.
- Intelligent control and high automation.
- Modular structure, easy to clean and dismantle.
- Small and light , easy to install.
- Low noise and free from vibration.
- Energy saving and low running cost.

QVC conveying system consist of materialcontainer,pipeline,vacuumconveyor,contrlkolsystemandsoon.

The max distance to i convey is 30m in height or 9Om in length and the max conveying capability can reach 18 t/h.

Technical parameters

Model	Transportation Ability (kg/h)	Air Pressure (mpa)	Air Consume (/min)
QVC-1	350	0.6	180
QVC-2	700	0.6	360
QVC-3	1050	0.6	540
QVC-4	1500	0.6	720
QVC-5	3000	0.6	1440

GJ-VIII Digital Metal Detector (For Tablets)

Various work frequent selection, self-learning function, according to different products can automatically switch the frequency. LCD touch screen operation, multi-language operation interface, convenient and quick. Store 100 kinds of product data, suitable for the variety of production line. The detection is stable and reliable, and the special structure design has strong anti-interference ability.



Technical parameters	
Model	GJ-VIII
Sensitivity Fe φ (mm)	0.5
Sensitivity Sus φ (mm)	1
Tunnel Height (mm)	25
Tunnel Width(mm)	115
Detection Speed	Free- falling Speed
Power Supply	220v
Alarm Mehod	Buzzer Alarm with flapping Rejection

HRD-100 High Speed De-duster

HRD-100 high-speed De-duster applies the principle of compressed air purging, centrifugal powder removal, roller edge grinding and vacuum cleaning to remove the powder and edge burrs attached to the surface of the tablet, so that the surface of the tablet is clean and the edges are neat. It is used for high-speed and high-efficiency powder removal of round tablets, special-shaped tablets, especially large-sized tablets, and engraved tablets, which can be used in connection with any type of medium and high-speed tablet presses.



Technical Parameters	
Electrical Connections	220V，50Hz, 1P/110V，60Hz,IP
Power Input	100W max
Tablet Size (mm)	φ5→φ25
Drum Speed (rpm)	10-150
Suction Capacity (m3/h)	350
Compressed Air	3bar (Oil，water and dust- free)
Outputy (tab./h)	800000tab./h(φ6mm)
Weight (kg)	35
Overall Size (mm)	750 X 320 X 1030

QVC Series Vacuum Conveying

QVC SERIES VACCUM CONVEYING

- The machine has the characteristics of long dust removal path, automatic turning and polishing of tablets, and good dust removal effect;
- The material of contact parts between machine and drug is SUS316L / SUS304, which meets GMP requirements;
- The screen body and cover of the machine are designed with building blocks, and the outlet height is easy to adjust;
- The whole machine adopts the quick installation connection structure, which makes the disassembly and installation of the machine fast, and there is no dead corner in cleaning;
- The entrance and exit of the machine can be adjusted by 360 degree circle, which is convenient for production and space saving;
- Outstanding production efficiency, which can meet the requirements of mass production of various shapes of Φ3—Φ25mm tablets;
- The new driving device is designed to ensure the machine running more smoothly and with low noise.



Model	Output	Max Dia. of tablet	Power Supply	Overall Dimensions	Weight	Compressed Air	Vacuum Cleaning	Dust removing Distance	Max.lifting height
SZS-230	800000 pcs./h(φ6mm)	Φ25mm	220v/110v 50-60Hz,1P	550x550x (H:1350-1500)mm	70Kg	0.1m³/min 0.05MPa	2.7m³/min 0.01MPa	6m	1220mm

Wet type granulation production line



Dry type granulation production line

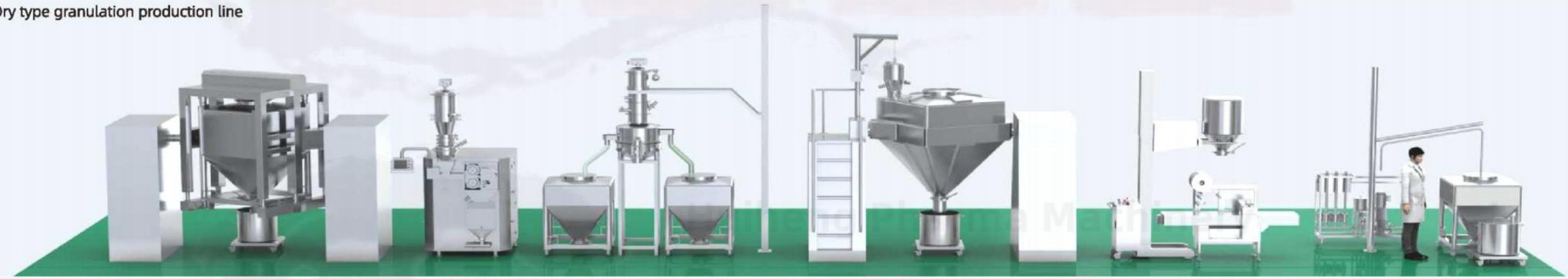

Dust-free batching production line



High speed blister pack , high speed cartoning pack production line (L shape connection)

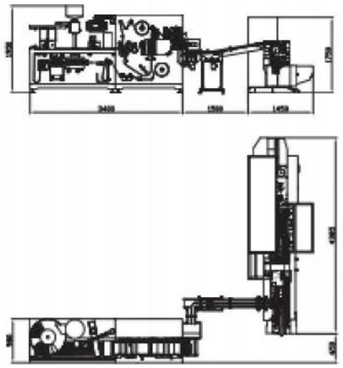

High speed blister pack, high speed carton pack production line (streight line connection

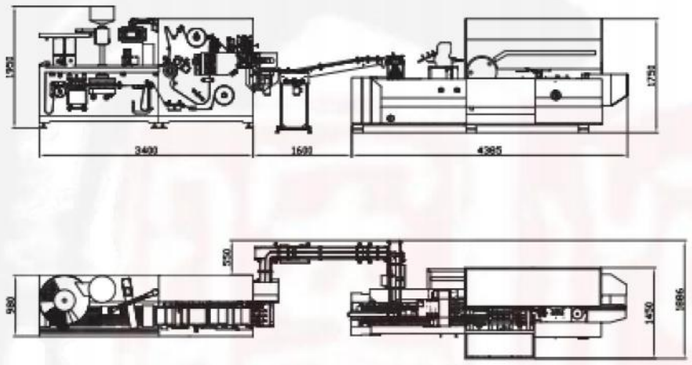

High speed blister pack, high speed cartoning pack production line (streight line connection B)

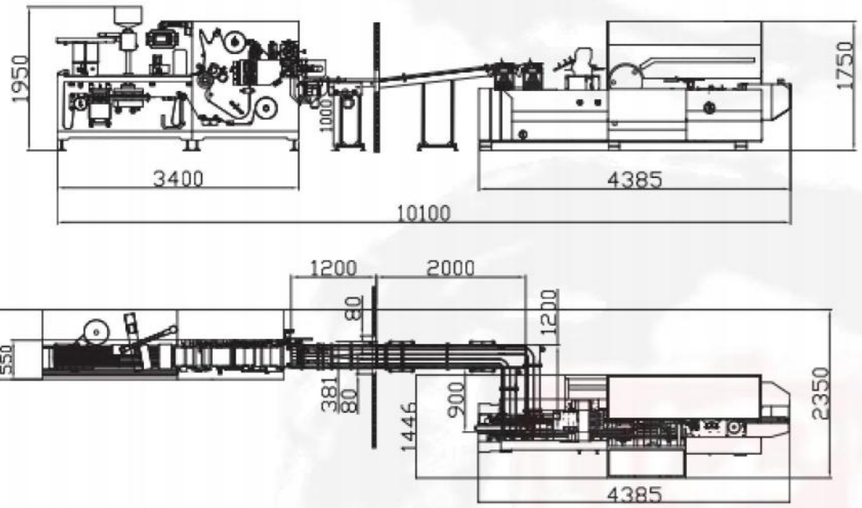

High speed blister pack, flow pac , hign speed carton pack, weght check , cellophone packing production line

